4” Motors & Controls

Pump Catalog - March 2022

MORE THAN A BRAND. **WE’RE A FAMILY.**

4” A.Y. McDonald Submersible Motors

A.Y. McDonald offers a full line of four inch asynchronous two-pole submersible motors ranging from 1/2 HP through 10 HP. Cooling and lubrication of the thrust bearing assembly is provided by a mixture of water and Glycol. Our two-wire motors have the capacitor placed in a Noryl cartridge directly connected to the motor. Two-wire motors do not require an external control box.

Features:

- 304 Stainless Steel for all parts that come in contact with water.
- 304 Stainless Steel motor shaft.
- Squirrel-cage rotor mounted on a self-centering thrust bearing.
- Stator housed in an airtight 304L Stainless Steel casing (can-type)
- Temp Rating 95ºF.
- Two-Wire - the controls are in the motor
- Three-Wire - requires the control box/starter

C US

A.Y. McDonald Submersible Motors

4" Water Well - Two Wire - Single Phase - 60 HZ

A.Y. McDonald Part No.	A.Y. McDonald Model No.	HP	Voltage	kw	Service Factor	AMP (in)	Downward Thrust	Cable length (ft).
3132-008	SM0412 0.5HP115V	1/2	115	0.37	1.6	8.6	500	5 1/2
3132-005	SM0412 0.5HP230V	1/2	230	0.37	1.6	3.9	500	5 1/2
3132-006	SM0412 0.75HP230V	3/4	230	0.55	1.5	6.3	500	5 1/2
3132-007	SM0412 1HP230V	1	230	0.75	1.4	7.7	700	5 1/2
3132-009	SM0412 1.5HP230V	1 1/2	230	1.1	1.3	10.6	700	5 1/2

4" Water Well - Three Wire - Single Phase - 60 HZ
(Control Box Required)

A.Y. McDonald Part No.	A.Y. McDonald Model No.	HP	Voltage	kw	Service Factor	AMP (in)	Downward Thrust	Cable length (ft).
3132-003	SM0413 0.5HP115V	1/2	115	0.37	1.6	10	500	5 1/2
3132-004	SM0413 0.5HP230V	1/2	230	0.37	1.6	5.5	500	5 1/2
3132-000	SM0413 0.75HP230V	3/4	230	0.55	1.5	7.4	500	5 1/2
3132-001	SM0413 1HP230V	1	230	0.75	1.4	8.3	700	5 1/2
3132-002	SM0413 1.5HP230V	1 1/2	230	1.1	1.3	10.1	700	5 1/2
3132-510	SM0413 2HP230V	2	230	1.5	1.25	10.6	700	5 1/2
3132-512	SM0413 3HP230V	3	230	2.2	1.15	14.3	1500	5 1/2
3132-513	SM0413 5HP230V	5	230	3.7	1.15	22.2	1500	8 3/4

4" Water Well - Three Wire - Three Phase - 60 HZ
(Starter Kit Required)

A.Y. McDonald Part No.	A.Y. McDonald Model No.	HP	Voltage	kw	Service Factor	AMP (in)	Downward Thrust	Cable length (ft).
3132-525	SM0433 0.5HP230V	1/2	230	0.37	1.6	3.6	500	5 1/2
3132-526	SM0433 0.5HP460V		460	0.37	1.6	1.6	500	5 1/2
3132-527	SM0433 0.75HP230V	3/4	230	0.55	1.5	4.6	500	5 1/2
3132-528	SM0433 0.75HP460V		460	0.55	1.5	2.2	500	5 1/2
3132-529	SM0433 1HP230V	1	230	0.75	1.4	4.7	500	5 1/2
3132-530	SM0433 1HP460V		460	0.75	1.4	2.6	500	5 1/2
3132-531	SM0433 1.5HP230V	1 1/2	230	1.1	1.3	8.1	700	5 1/2
3132-532	SM0433 1.5HP460V		460	1.1	1.3	3.6	700	5 1/2
3132-533	SM0433 1.5HP575V		575	1.1	1.3	2.9	700	5 1/2
3132-534	SM0433 2HP230V	2	230	1.5	1.15	10.2	700	5 1/2
3132-535	SM0433 2HP460V		460	1.5	1.15	4.6	700	5 1/2
3132-536	SM0433 2HP575V		575	1.5	1.15	3.7	700	5 1/2
3132-514	SM0433 3HP230V	3	230	2.2	1.15	10.7	1500	5 1/2
3132-515	SM0433 3HP460V		460	2.2	1.15	5.6	1500	5 1/2
3132-516	SM0433 3HP575V		575	2.2	1.15	5.8	1500	5 1/2
3132-517	SM0433 5HP230V	5	230	4	1.15	20.4	1500	8 3/4
3132-518	SM0433 5HP460V		460	4	1.15	8.9	1500	8 3/4
3132-519	SM0433 5HP575V		575	4	1.15	7.1	1500	8 3/4
3132-520	SM0433 7.5HP230V	7 1/2	230	5.5	1.15	25.7	1500	8 3/4
3132-521	SM0433 7.5HP460V		460	5.5	1.15	12	1500	8 3/4
3132-522	SM0433 7.5HP575V		575	5.5	1.15	9.6	1500	8 3/4
3132-523	SM0433 10HP460V	10	460	7.5	1.15	15.4	1500	11 1/2
3132-524	SM0433 10HP575V		575	7.5	1.15	12.3	1500	11 1/2

Do not use motors in swimming areas

4” A.Y. McDonald Submersible Motors
Two-Wire

4” Asynchronous two-pole submersible motor, made in AISI 304 stainless steel for parts in contact with water. Cooling and lubrication of the thrust bearing assembly and carbon bushes is provided by a mixture of water and glycol. Squirrel-cage rotor mounted on self-centering thrust bearing. Stator housed in an airtight stainless steel casing (canned-type) with both flanges and shell in AISI 304L stainless steel. Removable cable connector to allow fast and easy maintenance. The capacitor is placed in the Noryl cartridge directly connected to the motor, so the motor doesn’t require an external control box. Thermal protection included in the motor from 1/2 HP to 1 HP in the 230V - 60 Hz version.

Technical Specification

Flange	NEMA 4”
Insulation class	F
Degree of protection	IP68
Cooling flow	1.0 ft/sec @ 95 °F
Voltage tolerance	+ 6% / -10%
Max starts	20/h
Max operating depth	984 ft

Components

Canned stator with external shell and flanges made in AISI 304L stainless steel. The stator has 24 slots for better elasticity and regularity of operation. Class F double insulated copper wire. Thermal protection included in the motor from 1/2 HP to 1 HP in the 230V - 60 Hz version.

Kingsbury type thrust bearing unit consisting of tilting pads made of highly-resistant stainless steel and machined using the spherical lapping process.

Shafts with end part made of stainless steel AISI 304 with a special process of surface hardening and polishing of the working area of the bushes. Squirrel-cage rotor made in aluminium.

Electrical Data 60 Hz
Single Phase Motors - Two-Wire

P2		V	SF	In	In (SF)	Is/In	Cs/Cn	P1	N	Cos φ	η	C	Ø	LC
[HP]	[kW]	[V]		[A]	[A]			[W]	[min^{-1}]		%	[uF]	[AWG]	[ft]
1/2	0.37	115	1.6	8.6	10	4.2	0.65	800	3450	0.88	46	80	3x14	5 1/2
		230	1.6	3.9	5	4.6	0.65	800	3450	0.88	46	20	3x14	5 1/2
3/4	0.55	230	1.5	6.3	6.9	4.3	0.65	1200	3450	0.82	47	25	3x14	5 1/2
1	0.75	230	1.4	7.7	8.8	4.8	0.68	1500	3450	0.84	50	35	3x14	5 1/2
1 1/2	1.1	230	1.3	10.6	12.1	4.7	0.70	2120	3450	0.85	53	40	3x14	5 1/2

P2: Rated output
In: Rated current
Cs/Cn: Locked rotor Torque/Rated Torque
Cos φ: Power factor
Ø: Cable section
V: Rated voltage
In (SF): Service factor currect
P1: Power consumption
η: Efficiency
LC: Cable length
SF: Service factor
Is/In: Locked rotor current/Rated current
N: R.P.M
C: Capacitor

4” A.Y. McDonald Submersible Motors
Two-Wire

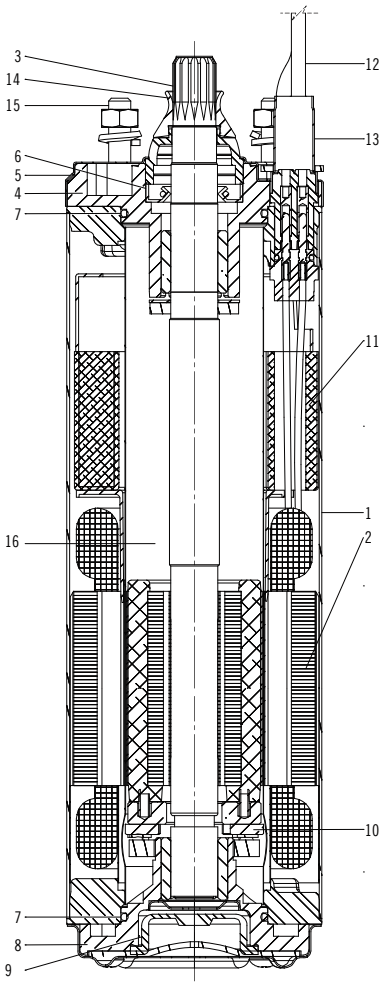

Materials

	COMPONENTS	
1	Int. and external sleeve	AISI 304
2	Stator	AISI 304L
3	Shaft	AISI 304
4	Upper bracket	Cast Iron
5	Bracket cover	AISI 304
6	Lip seal	NBR
7	Gasket	NBR
8	Lower Bracket	Cast Iron
9	Diaphragm	EPDM
10	Thrust Bearing	Stainless Steel - Graphite
11	Capacitor	Internal Capacitor
12	Cable	EPDM
13	Connecting Plug	AISI 316
14	Sand guard (fixed-removable)	NBR
15	Bolts & Screws	AISI 304
16	Cooling Liquid	Glycol + water

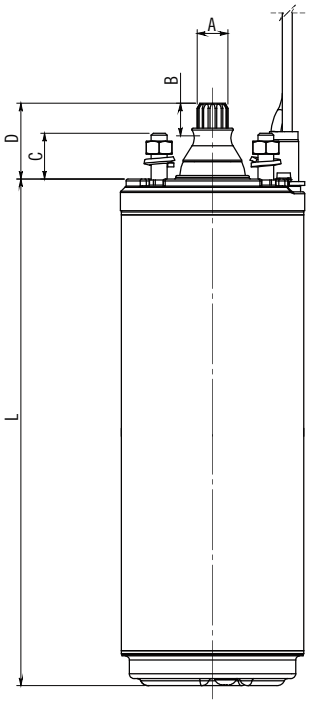

60 Hz Dimensions
Single Phase Motors

Type			L	Wt.	Axial Thrust
	[HP]	[kW]	[inch]	[lbs]	[lbf]
60 Hz	1/2 / 115V	0.37	13.4”	21.4	500
	1/2 / 230V	0.37	13.0”	21.0	500
	3/4	0.55	13.8”	23.2	500
	1	0.75	16.8”	28.9	700
	1 1/2	1.1	18.5”	33.3	700

60 Hz Dimensions

Pos.	inch	Pos.	inch
A	0.61”	E	1.465”
B	0.591”	F	3”
C	0906”	G	3.437”
D	1 1/2”	H	3.662”

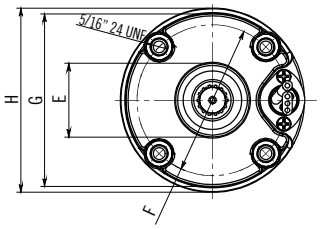

- CSA Certified

4” A.Y. McDonald Submersible Motors
Three-Wire

4” Asynchronous two-pole submersible motor, made in AISI 304 stainless steel for parts in contact with water. Cooling and lubrication of the thrust bearing assembly and carbon bushes is provided by a mixture of water and glycol. Squirrel-cage rotor mounted on self-centering thrust bearing. Stator housed in an airtight stainless steel casing (canned-type) with both flanges and shell in AISI 304L stainless steel. Removable cable connector to allow fast and easy maintenance. Motor suitable for use with variable frequency drive (60 Hz). For the single-phase 60 Hz version the thermal protection is included in the motor (from 1/2 HP to 1 HP). Overload protection must be provided by user for the three-phase version.

Technical Specification

Flange	NEMA 4”
Insulation class	F
Degree of protection	IP68
Cooling flow	1.0 ft/sec @ 95 °F
Voltage tolerance	+ 6% / -10%
Max starts	20/h
Max operating depth	984 ft

Components

Canned stator with external shell and flanges made in AISI 304L stainless steel. The stator has 24 slots for better elasticity and regularity of operation. Class F double insulated copper wire.

Kingsbury type thrust bearing unit consisting of tilting pads made of highly-resistant stainless steel and machined by using the spherical lapping process.

Shafts with end part made of stainless steel AISI 304/Duplex with a special process of surface hardening and polishing of the working area of the bushes. Squirrel-cage rotor made in aluminium for motor power 1/2HP through 3 HP and in copper for motor power 5 HP and above.

4” A.Y. McDonald Submersible Motors
Three-Wire

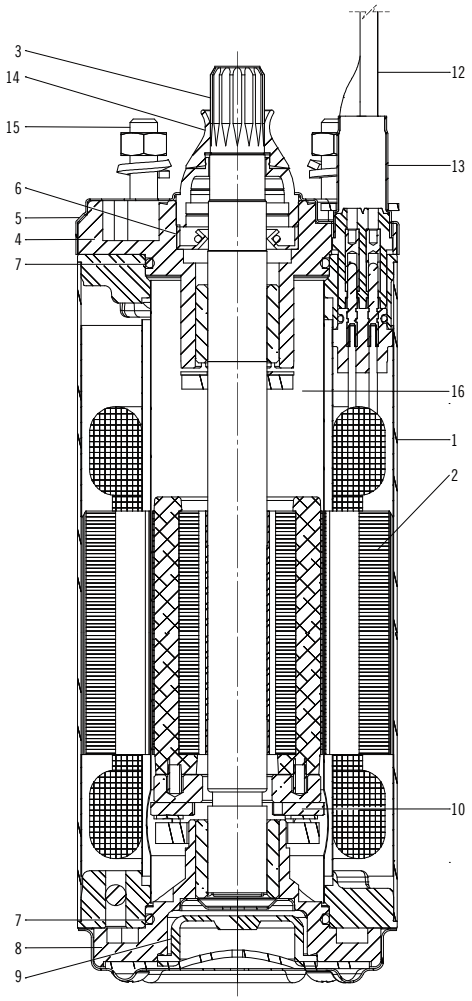

Materials

	COMPONENTS	
1	Int. and external sleeve	AISI 304
2	Stator	AISI 304L / Duplex
3	Shaft end	AISI 304
4	Upper bracket	Cast Iron
5	Bracket cover	AISI 304
6	Lip seal	NBR
7	Gasket	NBR
8	Lower Bracket	Cast Iron
9	Diaphragm	EPDM
10	Thrust Bearing	Stainless Steel - Graphite
11	Valve	AISI 303
12	Cable	EPDM
13	Connecting Plug	AISI 316
14	Sand guard (fixed-removable)	NBR
15	Bolts & Screws	AISI 304
16	Cooling Liquid	Glycol + water

4” A.Y. McDonald Submersible Motors
Three-Wire

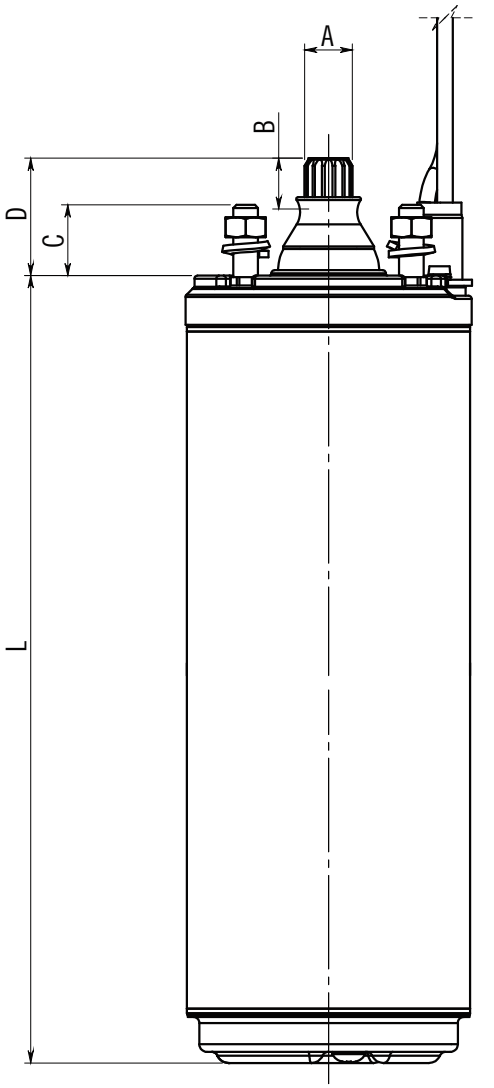

60 Hz Dimensions / Single Phase Motors

Type			L	WT	Axial Thrust
	[HP]	[kW]	[inch]	[lbs]	[lbf]
60 Hz 3W	1/2	0.37	10.5”	19.4	500
	3/4	0.55	11.3”	21.4	500
	1	0.75	13.6”	27.8	700
	1 1/2	1.1	16.2”	32.5	700
	2	1.5	16.2”	32.7	700
	3	2.2	21.4”	45.2	1500
	5	3.7	26.9”	59.8	1500

60 Hz Dimensions / Three Phase Motors

Type			L	Wt.	Axial Thrust
	[HP]	[kW]	[inch]	[lbs]	[lbf]
60 Hz	1/2	0.37	9.3”	16.3	500
	3/4	0.55	10.5”	19.4	500
	1	0.75	11.3”	21.4	500
	1 1/2	1.1	13.6”	25.8	700
	2	1.5	15.4”	30.5	700
	3	2.2	19.8”	40.8	1500
	5	4	24.2”	51.9	1500
	7 1/2	5.5	26.9”	59.8	1500
	10	7.5	30.1”	68.7	1500

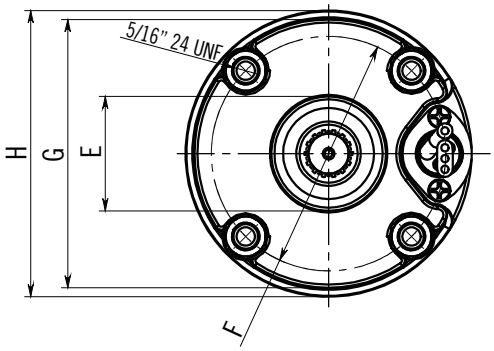

60 Hz Dimensions

Pos.	inch	Pos.	inch
A	0.61”	E	1.465”
B	0.591”	F	3”
C	0906”	G	3.437”
D	1 1/2”	H	3.662”

- CSA Certified

4” A.Y. McDonald Submersible Motors
Three-Wire

Electrical Data 60 Hz
Single Phase Motors - Three-Wire

P2		V	SF	In	In (SF)	Is/In	Cs/Cn	P1	N	Cos φ	η	C1	C2	Ø	LC
[HP]	[kW]	[V]		[A]	[A]			[W]	[min^{-1}]		%	[uF]	[uF]	[AWG]	[ft]
1/2	0.37	115	1.6	10	12.6	4.2	0.65	1050	3450	0.80	56	-	250-300	4x14	5 1/2
		230	1.6	5.5	6.6	4.6	0.65	1130	3450	0.78	54	-	59-71	4x14	5 1/2
3/4	0.55	230	1.5	7.4	8.6	4.0	0.65	1420	3450	0.80	56	-	86-103	4x14	5 1/2
1	0.75	230	1.4	8.3	9.8	4.9	0.68	1650	3450	0.80	62	-	105-126	4x14	5 1/2
1 1/2	1.1	230	1.3	10.1	11.5	4.6	0.70	2100	3450	0.88	67	10	105-126	4x14	5 1/2
2	1.5	230	1.25	10.6	13.0	5.4	0.65	2700	3450	0.95	70	20	105-126	4x14	5 1/2
3	2.2	230	1.15	14.3	16.2	3.6	0.50	3500	3450	0.94	71	45	208-250	4x14	5 1/2
5	3.7	230	1.15	22.2	24.3	3.3	0.50	5700	3450	0.98	76	2x40	270-324	4x14	8 3/4

Electrical Data 60 Hz
Three Phase Motors - Three-Wire

P2		V	SF	In	In (SF)	Is/In	Cs/Cn	P1	N	Cos φ	η	C	Ø	LC
[HP]	[kW]	[V]		[A]	[A]			[W]	[min^{-1}]		%	[uF]	[mm^2]	[ft]
1/2	0.37	230	1.6	3.6	3.7	4.4	3.2	870	3450	0.40	42	-	4x14	5 1/2
		460	1.6	1.6	1.9	5.0	3.2	870	3450	0.40	42	-	4x14	5 1/2
3/4	0.55	230	1.5	4.6	4.9	5.2	3.6	1140	3450	0.47	48	-	4x14	5 1/2
		460	1.5	2.2	2.4	5.5	3.6	1140	3450	0.47	48	-	4x14	5 1/2
1	0.75	230	1.4	4.7	5.2	6.4	4.2	1260	3450	0.59	59	-	4x14	5 1/2
		460	1.4	2.6	2.8	5.8	4.2	1260	3450	0.59	59	-	4x14	5 1/2
1 1/2	1.1	230	1.3	8.1	8.5	5.9	4.1	1875	3450	0.53	60	-	4x14	5 1/2
		460	1.25	3.6	3.9	6.7	4.1	1875	3450	0.53	60	-	4x14	5 1/2
2	1.5	230	1.15	10.2	10.8	6.1	3.8	2230	3450	0.57	67	-	4x14	5 1/2
		460	1.15	4.6	4.9	6.7	3.8	2230	3450	0.57	67	-	4x14	5 1/2
3	2.2	230	1.15	10.7	11.6	7.5	4.8	3160	3450	0.69	71	-	4x14	5 1/2
		460	1.15	5.6	6.0	7.1	4.8	3160	3450	0.69	71	-	4x14	5 1/2
5	4	230	1.15	20.4	21.6	7.4	4.0	5230	3450	0.70	77	-	4x14	8 3/4
		460	1.15	8.9	9.6	7.4	4.0	5230	3450	0.70	77	-	4x14	8 3/4
7 1/2	5.5	230	1.15	25.7	27.5	7.5	3.8	7100	3450	0.71	78	-	4x14	8 3/4
		460	1.15	12.0	13.0	7.5	3.8	7100	3450	0.71	78	-	4x14	8 3/4
10	7.5	460	1.15	15.4	16.9	7.1	3.9	9300	3450	0.78	80	-	4x14	11 1/2

P2: Rated output
In: Rated current
Cs/Cn: Locked rotor Torque/Rated Torque
Cos φ: Power factor
Ø: Cable section
V: Rated voltage
In (SF): Service factor currect
P1: Power consumption
η: Efficiency
LC: Cable length
SF: Service factor
Is/In: Locked rotor current/Rated current
N: R.P.M
C: Capacitor

A.Y. McDonald Control Box

A.Y. McDonald offers a full line of control boxes to be used with our single phase three-wire pump/motor assemblies.

Features:
- Metal casing
- Auxiliary contacts for control by probes

Standard

- For use with three wire single phase submersible motors 1/2 through 1 HP. Capacitor start.

A.Y. McDonald Part No.	A.Y. McDonald Model No.	HP	Voltage	HZ	KW
6619-004	SC0413 0.5HP115VS	1/2	115	60	.37
6619-005	SC0413 0.5HP230VS	1/2	230	60	.37
6619-014	SC0413 0.75HP230VS	3/4	230	60	.55
6619-015	SC0413 1HP230VS	1	230	60	.75

Electrical Data 60 Hz

For Motors Three-Wire

					A x B x C	W
[HP]	[kW]	[V]	[µF]	[V]	[inch]	[lbs]
1/2	0.37	115	250-300	125	4.9” x 8.2” x 2.9“	2.8
1/2	0.37	230	59-71	250	4.9” x 8.2” x 2.9“	2.4
3/4	0.55	230	86-103	250	4.9” x 8.2” x 2.9“	2.4
1	0.75	230	105-126	250	4.9” x 8.2” x 2.9“	2.6

Standard Control Box & Knockout Dimension

Pos.	inch
A	4.9”
B	8.2”
C	2.9”
G	1/2” conduit
H	3/4” conduit

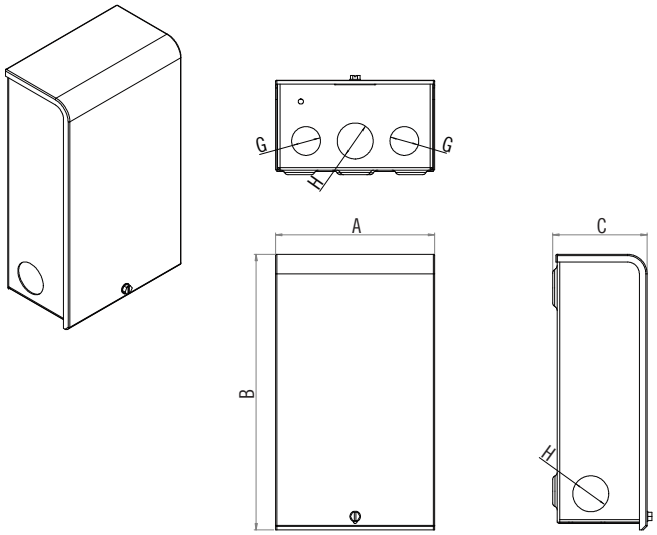

A.Y. McDonald Control Box

A.Y. McDonald offers a full line of control boxes to be used with our single phase three-wire pump/motor assemblies.

Features:
- Metal casing
- Auxiliary contacts for control by probes
- Thermal protection with external manual reset

4” CONTROL BOX DIMENSIONS TYPE CSCR

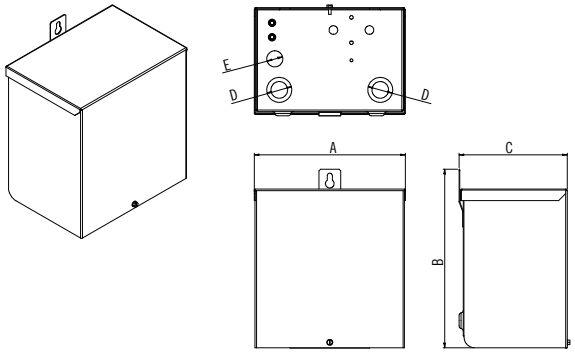

Control Box Dimension

Pos.	inch
A	8.3”
B	9.8”
C	5.9”
D	1” conduit
E	1/2” conduit

5HP Deluxe Control Box Dimension

Pos.	inch
A	8.3”
B	15.4”
B1	16.5”
C	6.3”
D	1” conduit
E	1/2” conduit

Standard

- For use with three wire single phase submersible motors 1 1/2 through 5 HP. Capacitor start and Capacitor run.

A.Y. McDonald Part No.	A.Y. McDonald Model No.	HP	Voltage	HZ	KW	Run Cap. Part No.	[µF]	Volts	Start Cap. Part No.	[µF]	Volts	Start Overload Part No.	Main Overload Part No.	Relay Part No.	Contactor Part No.
6619-012	SC0413 1.5HP230VS	1 1/2	230	60	1.1	3132-672	10	370	3132-664	105-126	250	-	3132-688	3132-696	-
6619-006	SC0413 2HP230VS	2	230	60	1.5	3132-674	20	370	3132-666	105-126	250	3132-682	3132-690	3132-698	-
6619-007	SC0413 3HP230VS	3	230	60	2.2	3132-676	45	370	3132-668	208-250	250	3132-684	3132-692	3132-700	-
6619-008	SC0413 5HP230VS	5	230	60	3	3132-678	80	370	3132-670	270-324	250	3132-686	3132-694	3132-702	-

Deluxe

- For use with three wire single phase submersible motors 1/2 through 5 HP. Includes Magnetic Line Contactor, Capacitor start, and Capacitor run.

A.Y. McDonald Part No.	A.Y. McDonald Model No.	HP	Voltage	HZ	KW	Run Cap. Part No.	[µF]	Volts	Start Cap. Part No.	[µF]	Volts	Start Overload Part No.	Main Overload Part No.	Relay Part No.	Contactor Part No.
6619-013	SC0413 1.5HP230VD	1 1/2	230	60	1.1	3132-673	10	370	3132-665	105-126	250	3132-681	3132-689	3132-697	3132-705
6619-010	SC0413 2HP230VD	2	230	60	1.5	3132-675	20	370	3132-667	105-126	250	3132-683	3132-691	3132-699	3132-707
6619-011	SC0413 3HP230VD	3	230	60	2.2	3132-677	45	370	3132-669	208-250	250	3132-685	3132-693	3132-701	3132-709
6619-016	SC0413 5HP230VD	5	230	60	3	3132-679	80	370	3132-671	270-324	250	3132-687	3132-695	3132-703	3132-7

AutoDRIVE

VARIABLE FREQUENCY DRIVE

115V / 230V | Single Phase Output
1/3 HP to 2 HP | 2 Wire & 3 Wire Motors
Pressure Switch | Pressure Transducer

230V | Three Phase Output
2 HP, 3 HP, & 5 HP

Another Innovative Product from A.Y. McDonald Mfg. Co.

MADE IN THE USA

American Made & Built To Last

Constant Pressure
- Reduced tank size
- Quick & simple installation

Easy Setup
- Setup constant pressure in 5 steps or less

Large Graphic Display
- Bright backlit screen
- Visible in direct sunlight

Rugged & Compact
- NEMA 3R steel enclosure
- Rated to 122°F, (104°F for SD3-5HP2)

Feature Set | Power Behind The Pump
- Feature set provides complete control capability for all pumping applications

Breaker Recommendations

Fuse/Breaker Recommendations Single Phase		
Motor HP	Input Current	Fuse/Breaker
115V		
1/3	8 A	10 A
1/2	14 A	20 A
1	28 A	35 A
230V		
1/2	6 A	10 A
3/4	9 A	15 A
1	14 A	20 A
1 1/2	18 A	25 A
2	28 A	35 A

Fuse/Breaker Recommendations Three Phase		
Motor HP	Input Current	Fuse/Breaker
230V		
2	20 A	25 A
3	30 A	40 A
5	42 A	55 A

Accommodated Wire Size

Connecting Load - Accommodated Wire Sizes	
Power Terminal	14 – 6 AWG
Minimum Torque	10.5 in-lb

AutoDRIVE

Enclosure Overview

Technical Specifications - Single Phase

Physical / Environmental	
Operating Temperature Range	1/3 HP to 2 HP -20°C to 50°C (*-4 F to 122°F)*
Storage Temperature Range	-30°C to 60°C (*-22°F to 140°F)*
Enclosure	NEMA Type 3R: Outdoor I Rainproof
Altitude	Derate by 5 °C every 2000 ft over 5500 ft of elevation
Dimensions	12.25 in x 9.25 in x 4.68 in
Weight	13 lbs
Specifications	
Model Number	SD1-2HP2PS I SD1-2HP2
Horsepower	1/3 HP to 2 HP
Motor Style	2-Wire or 3-Wire
Rated Current	
Rated Input Current	Max: 28 A
Rated Output Current	Max: 16 A
Input Power	
Input Phase	Single Phase
Input Voltage	115 / 230 VAC
Input Voltage Range	90V to 160V 180V to 260V
Input Frequency	60 Hz

Output Power	
Output Phase	Single Phase
Output Voltage	Equal to input
Output Frequency	5 Hz to 120 Hz
Horsepower	1/3 HP to 2 HP
Switching Frequency	2 kHz to 8 kHz
Output	V/f control
Electrical	
Short Circuit Withstand Rating	5 kA RMS Symmetrical Amps
Efficiency	95%
Startup Ramp Time	0 to 120 s
Shutdown Ramp Time	0 to 120 s or Coast To Stop
Overload Capacity	150% for 2 s
	Rated output current for 2 HP model based on typical full load current for submersible motors.
Digital Inputs	
Quantity	Two Programmable
Ratings	<15 V 7 mA I Galvanically Isolated
Analog Inputs	
Quantity	Two Programmable
Current Reference	4-20 mA One Input
Voltage Reference	0 to 5 VDC One Input
Terminal Block Size	24 to 16 AWG

AutoDRIVE

Enclosure Overview

Technical Specifications - Three Phase

Physical / Environmental	
Operating Temperature Range	-20°C to 50°C (*-4°F to 122°F*) -20°C to 40°C (*-4°F to 104°F*)
Storage Temperature Range	-30°C to 60°C (*-22°F to 140°F*)
Enclosure	NEMA Type 3R: Outdoor I Rainproof
Altitude	Derate by 5 °C every 2000 ft over 5500 ft of elevation
Dimensions	12.25 in x 9.25 in x 4.68 in
Weight	13 lbs
Specifications	
Model Number	SD3-2HP2 I SD3-3HP2 I SD3-5HP2
Horsepower	2 HP, 3 HP, 5 HP
Motor Style	3-Wire
Rated Current	
Rated Input Current	Max: 20 A, 30 A, 42 A
Rated Output Current	Max: 11 A, 13 A, 22 A
Input Power	
Input Phase	Single Phase
Input Voltage	230 VAC
Input Voltage Range	190V to 275V
Input Frequency	60 Hz

Output Power	
Output Phase	Three Phase
Output Voltage	230V
Output Voltage Range	190V - 275V
Output Frequency	5 Hz to 300 Hz
Horsepower	2 HP to 5 HP
Switching Frequency	2 kHz to 8 kHz
Output	V/f control
Electrical	
Short Circuit Withstand Rating	5 kA RMS Symmetrical Amps
Efficiency	95%
Startup Ramp Time	1 to 120 s
Shutdown Ramp Time	1 to 120 s or Coast To Stop
Overload Capacity	120% for 60 s
Analog Inputs	
Quantity	Two Programmable
Current Reference	4-20 mA Two Input
Voltage Reference	0 to 5 VDC One Input
Terminal Block Size	24 to 16 AWG

Starter Kits

IEC Starter Kits for three phase motors
Each kit includes Nema 1 enclosure, contactor, and overload assembled with the correct voltage coil needed.

STARTER KITS WITH 230V COIL

A.Y. McDonald Part No.	HP	Volts	Wt.
3131-303	1/2	230	6
3131-304	3/4	230	6
3131-305	1	230	6
3131-306	1 1/2	230	6
3131-307	2	230	6
3131-308	3	230	6
3131-309	5	230	6
3131-310	7 1/2	230	6
3131-311	10	230	9

STARTER KITS WITH 460V COIL

A.Y. McDonald Part No.	HP	Volts	Wt.
3131-316	1/2	460	6
3131-317	3/4	460	6
3131-318	1	460	6
3131-319	1 1/2	460	6
3131-320	2	460	6
3131-321	3	460	6
3131-322	5	460	6
3131-323	7 1/2	460	6
3131-324	10	460	6

STARTER KITS WITH 575V COIL

A.Y. McDonald Part No.	HP	Volts	Wt.
3131-333	1 1/2	575	10
3131-334	2 & 3	575	10
3131-335	5	575	10
3131-336	7 1/2	575	10
3131-337	10	575	10

Pumptec

QD Pumptec

- For use with 4” single phase, three wire submersible motors 1/3 through 1 HP.

HP	Volts	HZ	Franklin Model No.	A.Y. McDonald Model No.
1/3 - 1	230	60	580 007 0600	6617-145

Protects against:
- Low yield wells - Low voltage - Power surges
- Air or gas locked pump - Drop in water level
- Clogged well screen - Broken shaft or coupling - Worn pump parts

Pumptec - with remote reading

- For use with 4” single phase submersible motors 1/3 through 1 1/2 HP.

HP	Volts	HZ	Franklin Model No.	A.Y. McDonald Model No.
1/3 - 1 1/2	115/230	60	580 002 0600	6617-425

Protects against:
- Low yield wells - Low voltage
- Air or gas locked pump - Drop in water level
- Clogged well screen - Broken shaft or coupling - Worn pump parts

NOT COMPATIBLE WITH TWO-WIRE AY MOTORS

Pumptec - Plus

- For use with 4” single phase submersible motors 1/2 through 5 HP.

HP	Volts	HZ	Franklin Model No.	A.Y. McDonald Model No.
1/2 - 5	230	60	580 006 0100	6617-143

Protects against:
- Over/under load - Over/under voltage
- Low yield wells - Mud or sand clogging
- Cavitation (air lock) - Drop in water level
- Rapid cycling - Faulty check valve