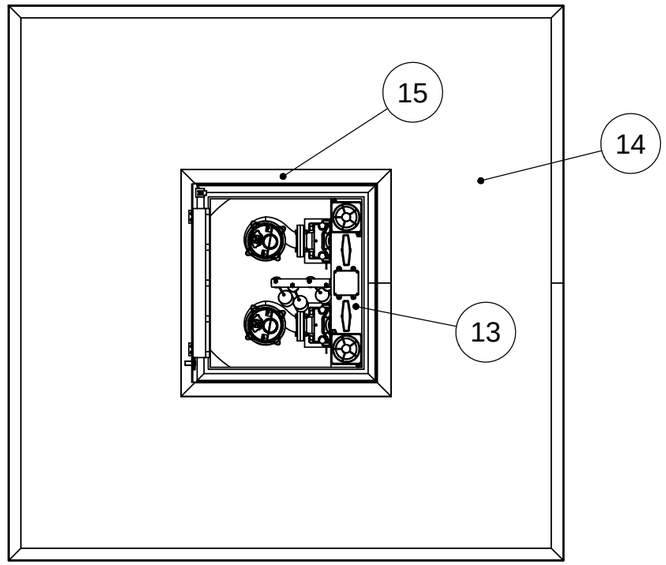

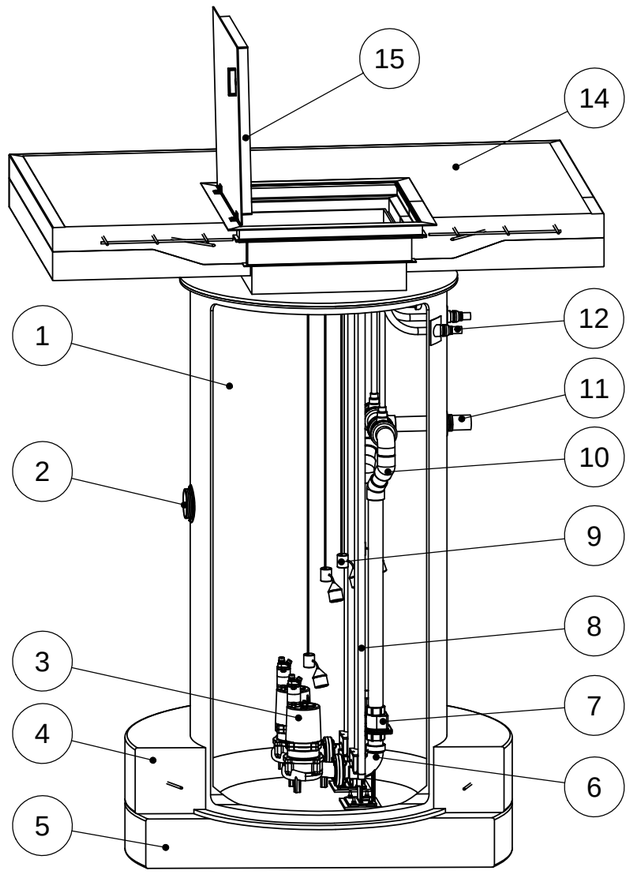

NO.	ELEV.	DESCRIPTION
1		60 IN X 144 IN FRP WET WELL
	2000.00	RIM
	1988.00	BASE
2	1994.00	IE - 1O IN INLET HUB FOR 6 IN SDR35 PVC
		9:00 POSITION
3		HYDROMATIC S3RX300 PUMP, 3 HP, 230V/3
		EXPLOSION-PROOF, GPM @ FT TDH
		SHIPPED LOOSE
4		REINFORCED CONCRETE ANTI-FLOATION RING - BY OTHERS
		OPTIONAL - USE IF GROUNDWATER IS A CONCERN
		__ IN WIDE X __ IN TALL
5		12 IN COMPACTED BASE - BY OTHERS
6		3 IN DISCHARGE ELBOW ASSEMBLY
7		3 IN CHECK VALVE
8		STAINLESS STEEL SLIDE RAILS
9		LEVEL SWITCHES
	1993.50	HIGH LEVEL ALARM
	1993.00	LAG PUMP ON
	1992.50	LEAD PUMP ON
	1991.00	LEAD PUMP OFF
10		3 IN SCH 80 PVC DISCHARGE MANIFOLD
11	1996.00	IE - 3 IN SCHEDULE 80 PVC DISCHARGE
		3:00 POSITION
12		ELECTRICAL CONDUITS
13		OPERATION DECK - JUNCTION BOXES - VALVE OPERATORS
14		REINFORCED CONCRETE SLAB - BY OTHERS
15		H20 ALUMINUM HATCH - INTERMITTANT TRAFFIC
16		DUPLEX ALTERNATING CONTROL PANEL (NOT SHOWN)
		SHIPPED LOOSE

CUSTOMER APPROVAL: _____ DATE: _____

BY THIS SIGNATURE, CUSTOMER INDICATES THAT HE HAS REVIEWED THIS SUBMITTAL DRAWING AND FOUND THAT IT MEETS ALL OF THE DESIGNER'S FUNCTIONAL REQUIREMENTS AND/OR SPECIFICATIONS. CUSTOMER HEREBY AUTHORIZES RC WORST & CO. INC. TO MANUFACTURE THE CUSTOM PRODUCT IN ACCORDANCEWITH THIS SUBMITTAL DRAWING.

AFS STN 60 144 00 00 30 30 PVC INT H20
PROJECT NAME - PROJECT # 123456
PACKAGED LIFT STATION

SHEET 1 OF 1

DWG NO.	DATE	SCALE	DRAWN BY	CHECKED BY
XXX	11/2/16	1:36	RJK	N/A

Copyright © 2016 by R.C. Worst & Co., Inc.

AUTOMATED FLOW SYSTEMS
625 BEST AVE
COEUR D'ALENE, ID 83814
PHONE 208.664.2133
4444 S YELLOWSTONE HWY
IDAHO FALLS, ID 83402
208.529.6868
4101 E BROADWAY
SPOKANE, WA 99202
PHONE 509.534.5616
WWW.RCWORST.COM