Barmesa® Pumps

Installation, Operation & Maintenance Manual

End Suction Centrifugal Pumps

IA SERIES

2-125 HP @
1750 y 3500 RPM

barmesapumps.com

IMPORTANT! - Read all instructions in this manual before operating or servicing a pump.

Last update: 07/30/2020

Before installation, read the following instructions carefully. Failure to follow instruction and safety information could cause serious bodily injury, death and/or property damage. Each Barmesa product is carefully inspected to insure proper performance. Closely following these instructions will eliminate potential operating problems, assuring years of trouble-free service.

⚠ DANGER Indicates an imminently hazardous situation which, if not avoided, WILL result in death or serious injury.

⚠ WARNING Indicates an imminenty hazardous situation which, if not avoided, MAY result in death or serious injury.

⚠ CAUTION Indicates a potentially hazardous situation which, if not avoided, MAY result in minor or moderate injury.

IMPORTANT! - Barmesa Pumps is not responsible for losses, injury or death resulting from failure to observe these safety precautions, misuse, abuse or misapplication of pumps or equipment.

ALL RETURNED PRODUCTS MUST BE CLEANED, SANITIZED, OR DECONTAMINATED PRIOR TO SHIPMENT, TO INSURE EMPLOYEES WILL NOT BE EXPOSED TO HEALTH HAZARDS IN HANDLING SAID MATERIAL. ALL APPLICABLE LAWS AND REGULATIONS SHALL APPLY.

⚠ WARNING Installation, wiring, and junction connections must be in accordance with the National Electric Code and all applicable state and local codes. Requirements may vary depending on usage and location.

⚠ WARNING Installation and servicing is to be conducted by qualified personnel only.

Keep clear of suction and discharge openings. Do not insert fingers in pump with power connected; the impeller can cause serious injury.

Always wear eye protection when working on pumps. Do not wear loose clothing that may become entangled in moving parts.

⚠ DANGER

Pumps build up heat and pressure during operation. Allow time for pumps to cool before handling or servicing the pump or any accessory items associated with or near the pump. Do not block or restrict the discharge pipe/hose.

⚠ WARNING **Do not** pump hazardous materials (flammable, caustic, etc.) or use these pumps in water over 160 °F. **Do not** exceed manufacturers recommended maximum performance, as this could cause the motor to overheat.

⚠ DANGER

This pump is not intended for use in swimming pools or water installations where there is human contact with pumped fluid.

⚠ DANGER

Risk of electric shock. To reduce risk of electric shock, always disconnect pump from power source before handling any aspect of the pumping system. ***Lock out power and tag.***

⚠ DANGER

Do not lift, carry or hang pump by the electrical cables. Damage to the electrical cables can cause shock, burns or death. **Never** handle connected power cords with wet hands. Use appropriate lifting device.

⚠ DANGER

Failure to permanently ground the pump, motor and controls before connecting to power can cause shock, burns or death.

⚠ WARNING

If engine driven, never operate in an enclosed building or area where exhaust gases can accumulate, or near a building where gases can seep inside; always take provisions for adecuate ventilation.

⚠ WARNING **Do not** breathe exhaust fumes when working in the area of the engine. (Exhaust gases are odorless and deadly poison.)

⚠ WARNING

Never add fuel to the tank while the engine is running. Stop engine and allow to cool.

Do not smoke while refueling the engine. **Do not** refuel near open flame.

⚠ WARNING Carefully read instruction manuals supplied with motor or engine before operating or servicing.

IMPORTANT! - Prior to installation, record Model Number, Serial, Amps, Voltage, Phase and HP from pump name plate for the future reference. Also record the Voltage and Current Readings at Startup:

1 Phase Models	
Amps:	Volts:
3 Phase Models	
Amps L1-2:	Volts L1-2:
Amps L2-3:	Volts L2-3:
Amps L3-1:	Volts L3-1:

Model Number: _____

Serial: _____

Phase: _____ HP: _____

barmesapumps.com

SUCTION:	1½" - 8" NPT or flange horizontal.
DISCHARGE:	1" - 6" NPT or flange vertical.
LIQUID TEMPERATURE:	160 °F (71 °C) max.
VOLUTE:	Cast iron ASTM A-48 class 30.
INTERMEDIATE COUPLING:	Cast iron ASTM A-48 class 30.
IMPELLER:	Cast iron ASTM A-48 class 30 or stainless steel 304. Investment casting, dynamically balanced.
SEAL:	Mechanical, type 01. Ceramic stationary part, carbon ring seal and exclusion in the rotating part. Buna-N elastomer and stainless steel spring.
SHAFT SLEEVE:	Stainless steel.
O-RINGS:	Buna-N.
MOTOR:	High quality premium efficiency TEFC or ODP electric motors, 1 & 3 phases, 60 Hz, NEMA, with rated output from 2 up to 125 HP, 1750 & 3500 RPM and frame sizes from 182 JM to 405 JM.
HARDWARE:	Carbon steel.
PAINT:	Air dry enamel, water based.

barmesapumps.com

Receiving inspection

Upon receiving the pump, it should be inspected for damage or shortages. If damage has occurred, file a claim immediately with the company that delivered the pump. If the manual is removed from the packaging, do not lose or misplace.

Storage

Any product that is stored for a period longer than six (6) months from the date of purchase should be bench tested prior to installation. A bench test consists of, checking the impeller to assure it is free turning and a run test to assure the motor (and switch if provided) operate properly.

At any time exceeding six (6) months, but no more than twenty four (24), the equipment must be stored in a controlled area, keeping it away from contact with rain, dust, etc., and the temperature is maintained between 43-104 °F. If there is a possibility of high humidity (coastlines, etc.), the entire unit must be sprayed with antioxidant liquid.

Service Stations

To find the nearest Barmesa Pumps authorized service shop, please directly contact your distributor or the factory.

Installation

The pump should be as close as possible to the liquid to be pumped, with a minimum number of couplings, adapters, etc., in order to reduce friction on the suction side.

The suction and discharge piping must be perfectly aligned in the pump volute and supported independently using support or anchors, this to prevent excessive load on the volute.

The anchors of the motor are to be anchor, on a raised base, approximately 4", this to prevent accumulated water from entering the motor.

***See friction table in pipes and fittings to determine the dimensions of the suction and discharge. (Page 8)*

Suction

Use pipe or hose reinforced sufficiently robust to prevent collapsing by the difference in atmospheric pressure. Check for leaks at all joints.

A successful operation depends on the calculation of the friction loss in the suction, considering acceptable limits. The minimum suction pipe size to use can be determined by comparing the NPSH available at the pump suction against the NPSH required by the impeller, as shown in the performance curves.

Usually, we recommend using a pipe diameter of 1/2" to 1" greater as that of the suction volute or body.

A strainer or sieve should be installed in the suction to prevent the entry of objects. The strainer must have a free entry area at least three times the pipe diameter. Usually a suction valve is combined with a strainer *Figure 1*.

Figure 1 **Proper installation.**

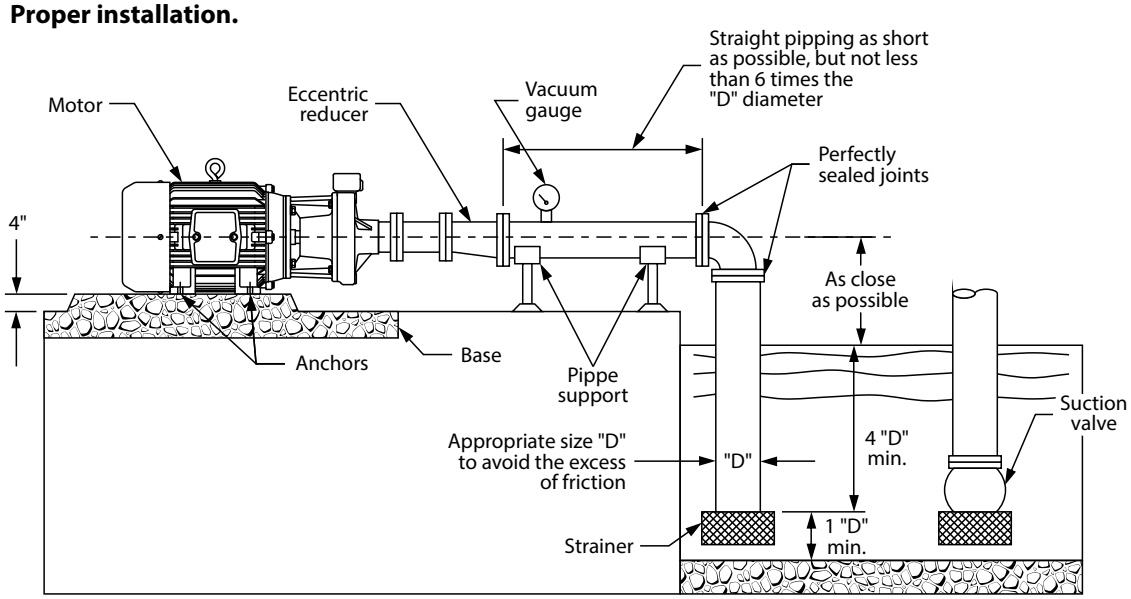

Table 1 **Friction in meters x 100 m of piping.**

LITERS PER MINUTE	PIPING DIAMETER											GALLONS PER MINUTE
	1"	1¼"	1½"	2"	2 ½"	3"	4"	5"	6"	8"	10"	
30	4.54											8
37	6.86	1.77										10
45	9.62	2.48										12
57	16.2	4	1.53									15
68	20.6	5.22	2.42									18
76	25.1	6.34	2.94									20
95	38.7	9.6	4.48	1.2	0.54							25
113	54.6	13.6	6.26	1.82	0.75							30
151	95	23.5	10.79	3.1	1.28							40
170	119	29.4	13.45	3.85	1.6							45
189	146	36	16.4	4.67	1.94	0.66						50
208		43.2	19.7	5.51	2.33	0.79						55
227		51	23.2	6.59	2.72	0.92						60
246		59.6	27.1	7.7	3.17	1.07						65
265		68.8	31.3	8.86	3.63	1.22						70
284		78.7	35.8	10.15	4.14	1.39						75
303		89.2	40.5	11.4	4.66	1.57						80
322		100	45.6	12.6	5.27	1.77						85
360		125	56.5	15.8	6.49	2.18	0.57					95
378		138	62.2	17.4	7.11	2.39	0.62					100
416			75.25	21.05	8.55	2.88	0.75					110
454			88.3	24.7	10	3.37	0.88					120
530			119	33.2	13.5	4.51	1.17	0.38				140
568			137.5	38.1	15.45	5.16	1.33	0.43				150
605			156	43	17.4	5.81	1.49	0.48				160
643				48.55	19.65	6.54	1.67	0.54				170
681				54.1	21.9	7.28	1.86	0.6				180
757				66.3	26.7	8.9	2.27	0.73	0.3			200
833				80	32.2	10.07	2.72	0.87	0.35			220
908				95	38.1	12.6	3.21	1.03	0.41			240
984				111	44.5	14.7	3.74	1.2	0.48			260
1060				128	51.3	16.9	4.3	1.38	0.56			280
1135				146	58.5	19.2	4.89	1.58	0.63			300
1324					79.2	26.1	6.55	2.11	0.85			350
1514					103	33.9	8.47	2.72	1.09	0.27		400
1892						52.5	13	4.16	1.66	0.42		500
2082						63.2	15.7	4.94	2	0.5		550
2271						74.8	18.6	5.88	2.34	0.59	0.19	600
2649						101	25	7.93	3.13	0.79	0.25	700
2838							28.7	9.07	3.59	0.91	0.29	750
3028							32.4	10.22	4.04	1.02	0.32	800
3217							36.6	11.56	4.5	1.13	0.36	850
3406							40.8	12.9	5.05	1.27	0.41	900
3595							45.5	14.35	5.61	1.42	0.45	950
3785							50.2	15.8	6.17	1.56	0.5	1000
4163								19.15	7.41	1.87	0.6	1100
4542								22.5	8.76	2.2	0.7	1200
4920								26.45	10.2	2.56	0.81	1300

NOTE: The values in this table refer to frictions and clean water pipes and hoses smooth walls. As used pipe and / or hose rough walls increase the values about 50% to 100%.

barnetpumps.com

Table 1 **Equivalent length in meters of straight pipe and valve connections for calculating friction.**

PART	DESCRIPTION	DIAMETER								
		1"	1¼"	1½"	2"	2 ½"	3"	4"	5"	6"
	STANDARD 90° ELBOW	0.84	1.07	1.22	1.68	1.98	2.44	3.35	4.12	4.88
	MEDIUM RADIUS ELBOW 90°	0.69	0.92	1.07	1.37	1.68	2.14	2.75	3.51	4.27
	LONG RADIUS ELBOW 90°	0.54	0.69	0.84	1.07	1.37	1.6	2.14	2.75	3.36
	STANDARD 45° ELBOW	0.38	0.54	0.61	0.77	0.92	1.15	1.53	1.83	2.29
	STANDARD TEE	1.68	2.29	2.75	3.36	4.28	5.19	6.71	8.23	10.1
	ANGLE GLOBE VALVE (OPEN)	3.97	5.49	6.71	8.23	10.7	12.2	16.8	21.3	25.9
	GLOBE VALVE (OPEN)	7.93	10.7	13	16.8	21.3	24.4	35.1	42.7	48.8
	GATE VALVE (OPEN)	0.19	0.25	0.29	0.38	0.43	0.54	0.69	0.84	1.07
	INCREASER	1.21	1.52	1.82	2.74	3.35	4.26	6.09	7.92	10.1
	REDUCER	0.3	0.3	0.3	0.61	0.61	0.9	1.21	1.21	2.13
	SUCTION VALVE	0.91	1.21	1.52	2.13	2.74	3.35	4.87	6.4	7.92

barmesapumps.com

Figure 2 **Wrong installation.**

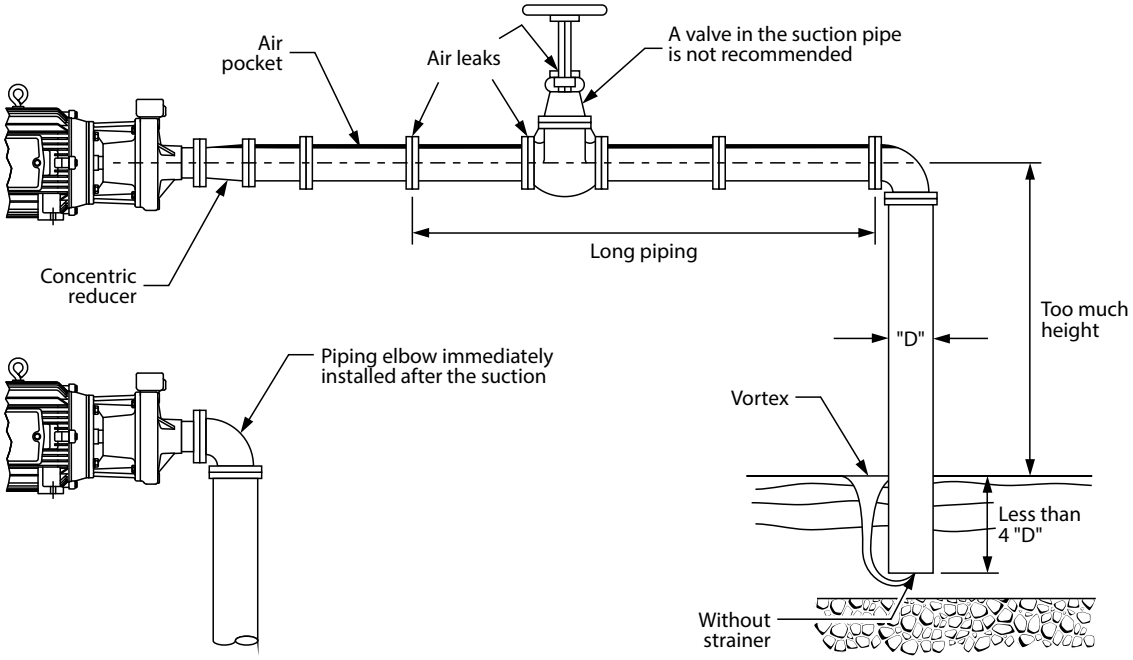

Figure 3 **Inclination.**

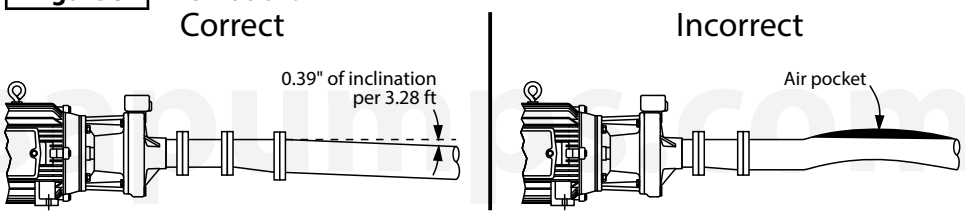

Suction height - suction pipe should have a slope of 0.39" per 3.3 ft of suction. Never exceed 16.4 ft suction, considering friction. *(Figure 3)*

Figure 4 **Positive suction.**

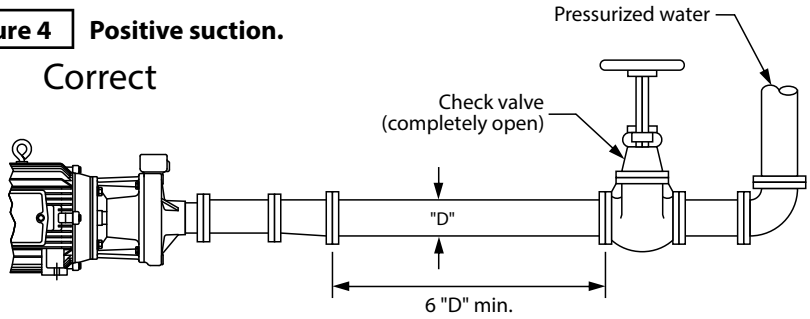

Positive/Drowned Suction - A gate valve is installed in the suction pipe to service the pump *(Figure 4)*. Volute or body have plugs, and these must be removed to allow trapped air to escape.

Figure 5 **Positive suction.**

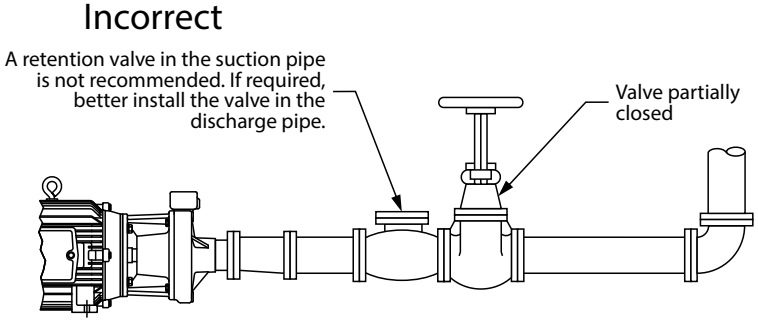

Discharge pipe

Use pipe or hose reinforced sufficiently robust to prevent destruction due to high pressure.

Due to the cost of energy or BHP necessary to overcome the friction generated by using a smaller diameter pipe, a larger diameter discharge pipe is commonly used than the required by the volute or body.

Figure 6 **Discharge piping.**

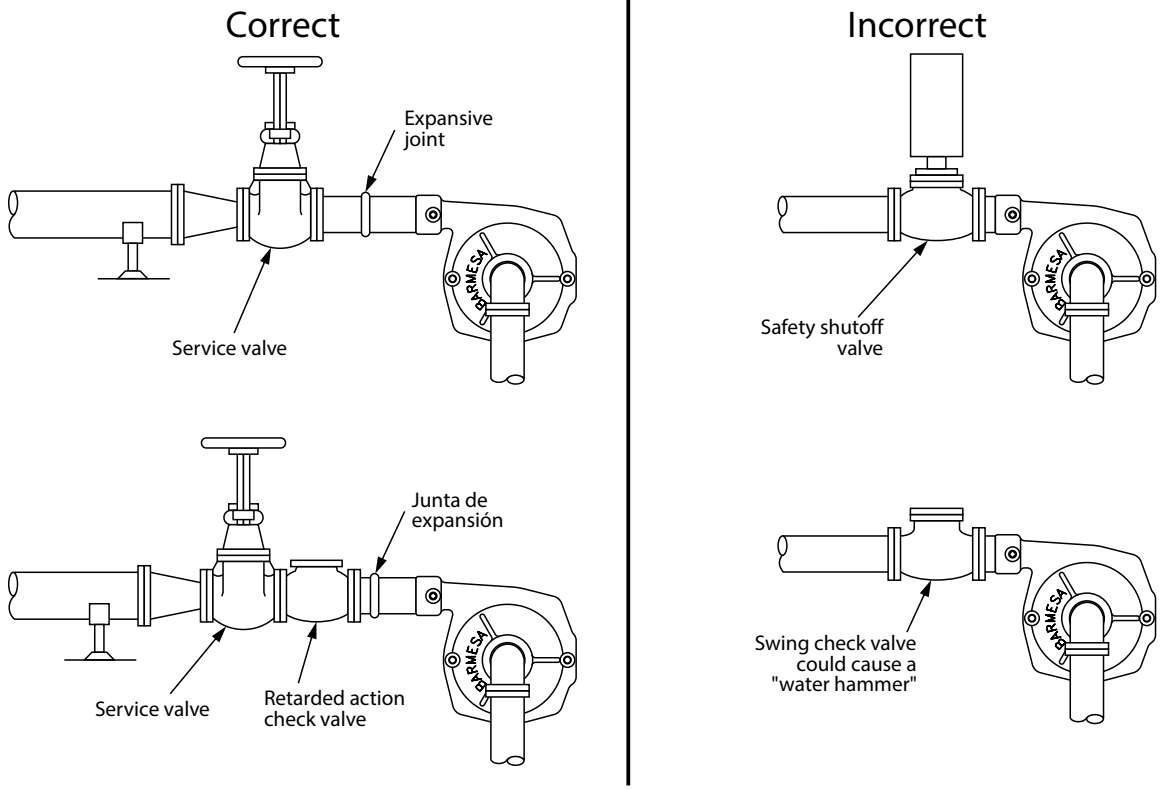

In order to determine the optimal size of the piping, compare the total cost of the equipment's operation (cost of the pump, control equipment, piping and energy consumption). By increasing the discharge diameter reasonably, it reduces the required BHP due to the low friction. Perform different tests using several piping diameters until you find the more convenient.

The pipe, valves, etc. should be perfectly align with the volutes suction and discharge centerlines, this to avoid any excessive loads on the pumps volute. If needed, install new expansive joints to protect the pump from excessive thermal or pressure forces.

Pre-Operation

1. **Check Voltage and Phase -** Compare the voltage and phase information stamped on the pump name plate.
2. **Check Pump Rotation -** Improper motor rotation can result in poor pump performance and can damage the motor and/or pump. Check rotation on three phase units by momentarily applying power and observe the "kickback".

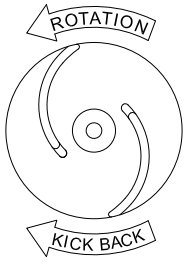

Bottom of Pump

Kickback should always be in a counter-clockwise direction as viewed from motor end or opposite to impeller rotation. Impeller rotation is counter-clockwise as viewed from bottom of pump.

3. **Name Plate -** Record the information from the pump name plate to drawing in front of manual for future reference.
4. **Priming -** Every centrifugal pump must be primed (suction pipe and pump's body should have liquid), before operating.

Install the foot valve at the suction pipe *Figure 1* and fill with liquid the superior part of the pump's body. Sometimes air is trapped inside the body, to remove it you should uncap the male plug until the liquids spills out. Re-install the male plug using a sealant.

IMPORTANT! - Do not operate pump without priming first. Operating dry will damage seal.

barmesapumps.com

Starting
When starting for the first time your equipment check that the discharge valve is 90% closed. Gradually open the valve until the motor runs at full load (amperage plate). Never allow the amperage consumed by the pump exceeds the maximum permitted by the engine.

Mechanical seal
Mechanical seals installed in this pumps are lubricated by water, there for the pump should not be operated dry. You will find the appropriate seal for each use and liquid to be pumped, check with your Barmesa Pumps distributor for more information.

Stuffing box*
If the pump has graphite packing (stuffing box) consider the following:

- When the pump is placed into operation, the liquid will drip from the stuffing box; if this does not happen, loosen the nuts on the stuffing box until dripping occurs.
- After a few minutes of operation, gradually tighten the nuts until the drip decreases but does not stop.
- Once the pump has operated for a reasonable period and the dripping has not decreased to "a few drops per minute", it is necessary to tighten the nuts stuffing box. If tightening the nuts the required drip is not achieved, the graphite packing rings must be replaced.

Frame*
All pumps come with factory lubricated bearings. It is very important to have oil in the oil tank. (Use oil DTE26). Change the oil every 1,000 hours of operation, considering a daily operation of 8 hours.

It is important not to overfill the oil tank because it would cause an increase in pressure by heating, affecting the bearings and seals. In normal operation, the frame temperature increases 122 °F above ambient temperature.

Flexible coupling*
All pumps operated through flexible coupling or by pulleys and belts must be perfectly aligned to ensure smooth operation. In no case problems occur with flexible couplings if the pump-motor alignment is correct. All pumps are manufactured following this condition.

For Barmesa pumps with universal transmission.

IMPORTANT! - Always unplug the pump before applying maintenance, service or repair to avoid electric shock.

Maintenance
Body and Impeller - All pump parts are removable by removing nuts and bolts. For body maintenance, disconnect the suction and discharge, and remove the body of the intermediate coupling. For maintenance of the impeller is not necessary to remove the suction or discharge, simply remove the body nuts; this would uncover the impeller. Examine and replace if it shows wear or damage.

When the impeller requires replacement, remove the screw of the shaft, and using a puller, remove the impeller being careful not to abuse the keyway of the shaft.

Mechanical Seal - To inspect or replace the shaft seal, remove the body and impeller. If any part shows wear or damage, replace both parts (stationary seat and rotary part). The rotating seal parts may be stuck together with the shaft, this happens when the seal has been assembled for a long time.

If the mechanical seal does not leak and there is need to open the pump for inspection or cleaning, *DO NOT* remove the seal, remove the spring only if the impeller needs to be removed. Once a seal has been in operation is very difficult to remove and reassembly without creating a seal leak.

Disassembly
Mechanical Seal - Perform the steps above. Remove the rotating part. It may be necessary to remove the intermediate link to remove the stationary seat. To do this, remove the nuts and washers that attach the coupling to the motor. When removing the coupling, the steady part will move towards the front seat of the shaft and the sleeve. If the seat does not yield itself, push from the rear of the coupling.

Handle seal parts with extreme care. DO NOT damage lapped surfaces.

Reassembly
Mechanical Seal - Identify all parts of *Figures 7* and *8*. The ring (6) and seat (1) are perfectly polished, so care must be taken not to scratch or smudge. The cleaning during the assembly process is very important.

IMPORTANT! - All parts must be clean before reassembly.

barmesapumps.com

Step 1: Install the intermediate coupling if it was previously removed. Make sure the shaft and cavities, where will it seats, are clean. The shaft sleeve should not be sharp, but a radius of about 1/32". It is recommended that lightly polish the area of the shaft. If the shaft and it radius are perfectly polished, the seal can be relatively easily installed.

Step 2: Install the seat assembly (1 and 2) on the inside of the intermediate coupling, slightly moistening with water on the rubber parts **(do not use grease or oil)**. This assembly should be done only manually, meaning without the use of an instrument.

Step 3: Install the rotating portion of the seal without the spring. Moisten the arrow and the inside of the seal with some water **(do not use grease or oil)**. With clean, dry hands, insert the rotating portion to the shaft, sliding it abuts the stationary seat. Once the seal is in place, insert the spring (5).

Step 4: Place the impeller and washers; tighten the hex screw.

Figure 7 **Mechanical Seal - Sectional View.**

1 - Ceramic seat
2 - Seal seat Buna-N
3 - Inox. retainer
4 - Inox. jacket
5 - Inox. spring
6 - Carbon ring
7 - Elastomer Buna-N
8 - Inox. washer

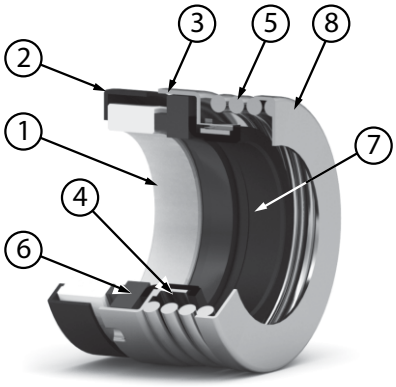

Figure 8 **Mechanical Seal - Assembly.**

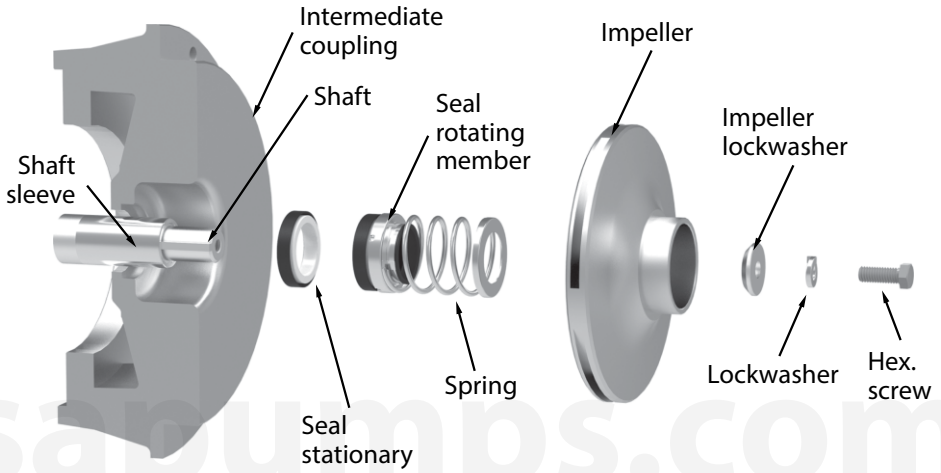

hidrosapumps.com

HIGH PRESSURE CENTRIFUGAL PUMP
MODEL IA1, GENERAL DIMENSIONS

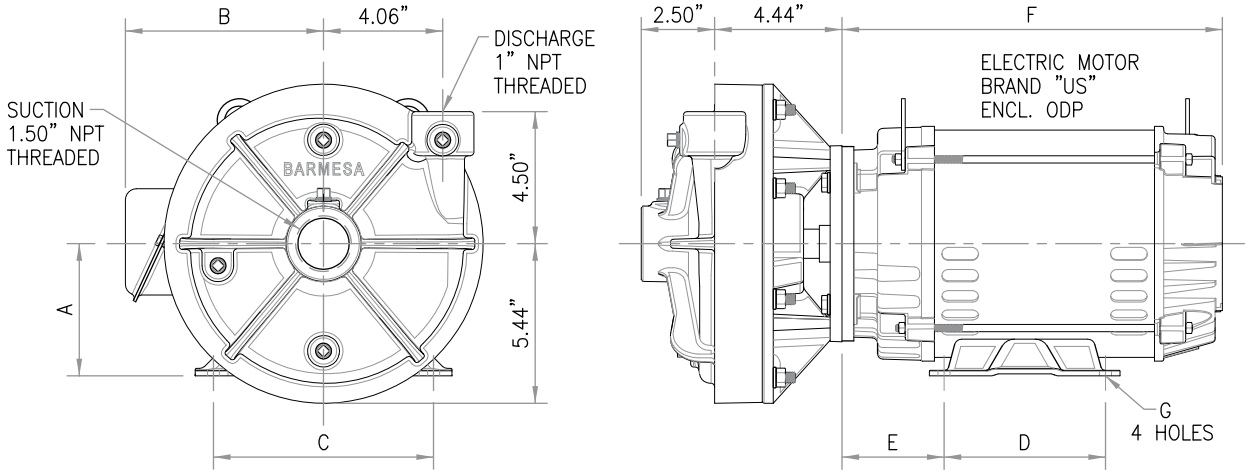

MODEL	CODE	HP	RPM	PHASE	FRAME	A	B	C	D	E	F	G
IA1–2–4		2	1735	3	145JM	3.50		5.50	5.00	2.75	12.00	0.34
IA1–3–2		3	3510	3	182JM	4.50	6.88	7.50	4.50	3.63	11.81	0.41
IA1–5–2		5	3490	3	184JM				5.50			
IA1–7.5–2		7.5	3515	3	213JM	5.25	7.60	8.50	5.50	4.25	13.50	0.41

ALL DIMENSIONS ARE IN INCHES.

barmesapumps.com

HIGH PRESSURE CENTRIFUGAL PUMP
MODEL IA1 GENERAL DIMENSIONS

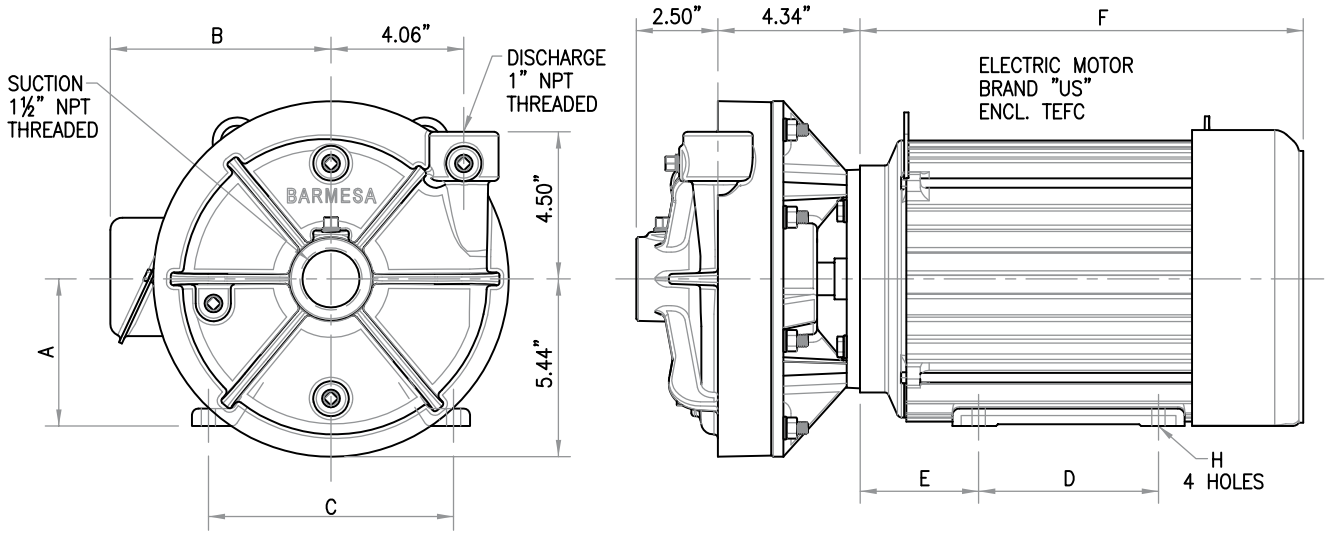

MODEL	HP	RPM	PHASE	FRAME	A	B	C	D	E	F	H
IA1–3–2	3	3540	3	182JM	4.50	7.50	7.50	4.50	3.63	13.56	0.41
IA1–5–2	5	3525	3	184JM				5.50			
IA1–7.5–2	7.5	3535									

ALL DIMENSIONS ARE IN INCHES.

HIGH PRESSURE CENTRIFUGAL PUMP
MODEL IA1-1/2 & IA1-1/2H
GENERAL DIMENSIONS

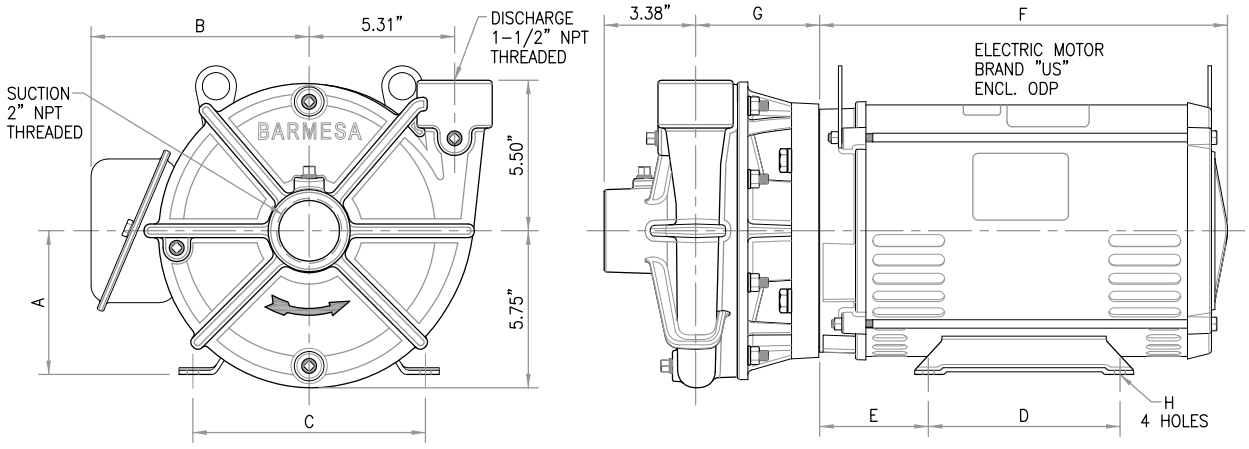

MODEL	CODE	HP	RPM	PHASE	FRAME	A	B	C	D	E	F	G	H
IA1-1/2-5-2		5	3490	3	184JM	4.50	6.88	7.50	5.50	3.63	11.81	4.25	0.41
IA1-1/2-7.5-2		7.5	3515	3	213JM	5.25	7.60	8.50	5.50	4.25	13.25		
IA1-1/2-10-2		10	3505	3	215JM				7.00		14.75	4.54	
IA1-1/2-15-2		15	3530	3	254JM	6.25	10.0	10.0	8.25	4.50	19.06	4.54	0.53
IA1-1/2-20-2		20	3525	3	256JM				10.0		19.65		
IA1-1/2H-3-4		3	1740	3	182JM	4.50	6.88	7.50	4.50	3.63	11.81	4.25	0.41
IA1-1/2H-15-2		15	3530	3	254JM	6.25	10.0	10.0	8.25	4.50	19.06	4.54	0.53
IA1-1/2H-20-2		20	3525	3	256JM				10.0		19.65		
IA1-1/2H-25-2		25	3525	3	284JM	7.00	11.75	11.0	9.50	4.75	20.50	5.18	
IA1-1/2H-30-2		30	3525	3	286JM				11.0				

ALL DIMENSIONS ARE IN INCHES.

barmesapumps.com

HIGH PRESSURE CENTRIFUGAL PUMP
MODEL IA1½ & IA1½H
GENERAL DIMENSIONS

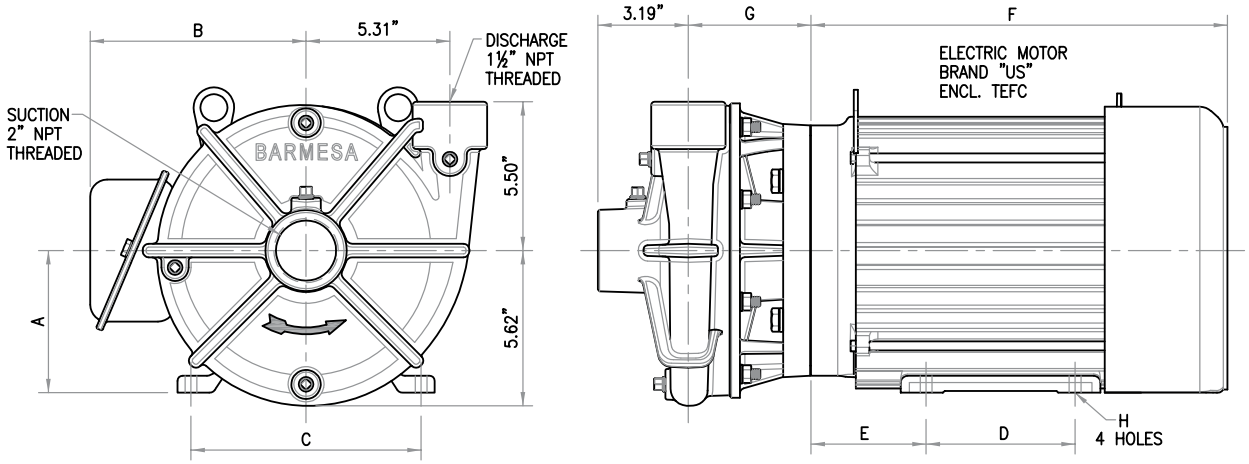

MODEL	HP	RPM	PHASE	FRAME	A	B	C	D	E	F	G	H
IA1½-5-2	5	3525	3	184JM	4.50	7.50	7.50	5.50	3.63	13.56	4.25	0.41
IA1½-7.5-2	7.5	3535										
IA1½-10-2	10	3525	3	215JM	5.25	8.25	8.50	7.00	4.25	17.13	4.54	0.44
IA1½-15-2	15	3525										
IA1½-20-2	20	3535	3	256JM	6.25	9.94	10.0	10.0	4.25	21.88	4.54	0.53
IA1½H-3-4	3	1740	3	182JM	4.50	7.50	7.50	4.50	3.63	13.56	4.25	0.41
IA1½H-15-2	15	3525	3	215JM	5.25	8.25	8.50	7.00	4.25	17.13	4.54	0.44
IA1½H-20-2	20	3535	3	256JM	6.25	9.94	10.0	10.0	4.25	21.88	4.54	0.53
IA1½H-25-2	25	3555	3	284JM	7.00	13.1	11.0	9.50	4.75	22.63	5.00	0.53
IA1½H-30-2	30	3560	3	286JM				11.0				

ALL DIMENSIONS ARE IN INCHES.

barmesapumps.com

HIGH PRESSURE CENTRIFUGAL PUMP
MODEL IA1½, GENERAL DIMENSIONS

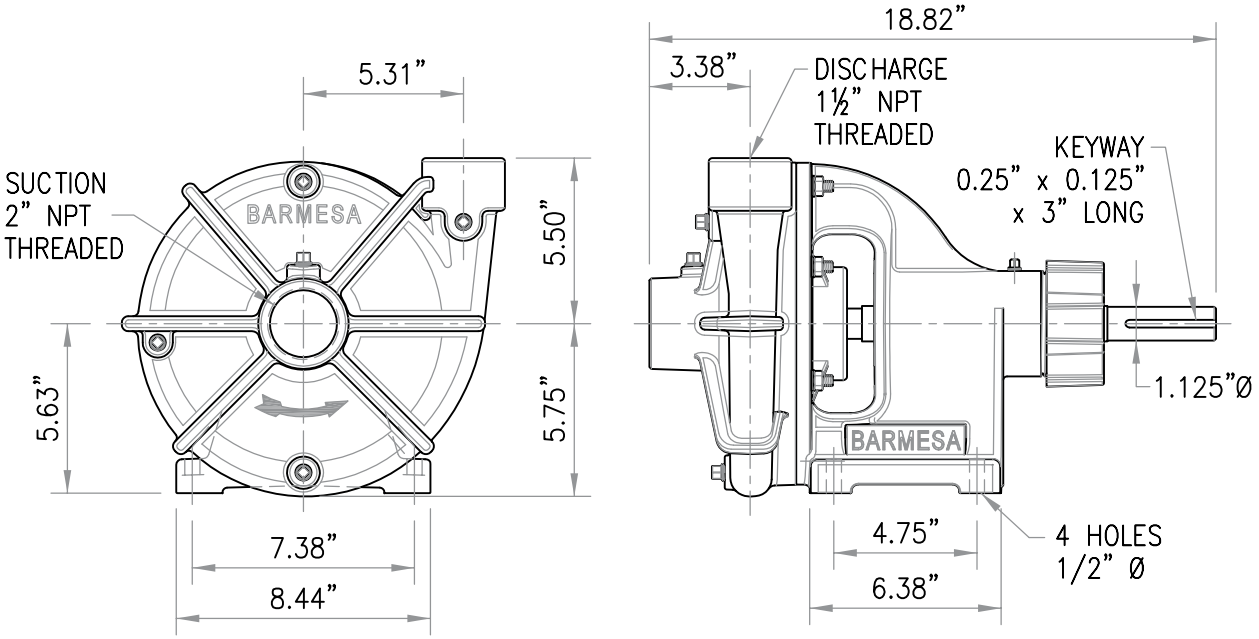

HIGH PRESSURE CENTRIFUGAL PUMP
MODEL IA1–1/2XH GENERAL DIMENSIONS

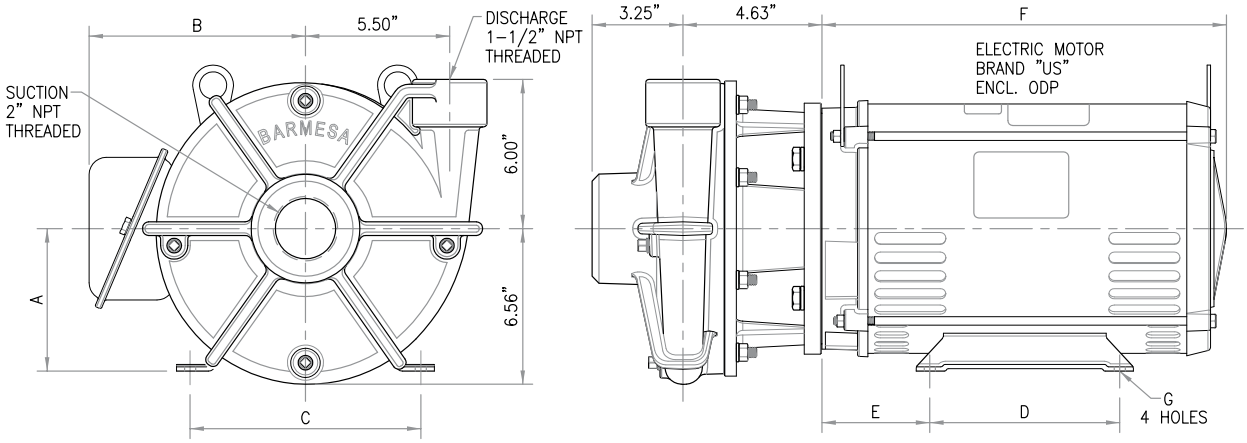

MODEL	CODE	HP	RPM	PHASE	FRAME	A	B	C	D	E	F	G
IA1–1/2XH–3–4		3	1750	3	182JM	4.50	6.88	7.50	4.50	3.63	11.81	0.41
IA1–1/2XH–5–4		5	1730	3	184JM				5.50			
IA1–1/2XH–15–2		15	3530	3	254JM	6.25	10.0	10.0	8.25	4.50	19.06	0.53
IA1–1/2XH–20–2		20	3525	3	256JM				10.0		19.65	
IA1–1/2XH–25–2		25	3525	3	284JM	7.00	11.75	11.0	9.50	4.75	20.50	

ALL DIMENSIONS ARE IN INCHES.

barmesapumps.com

HIGH PRESSURE CENTRIFUGAL PUMP
MODELS IA2 & IA2H
GENERAL DIMENSIONS

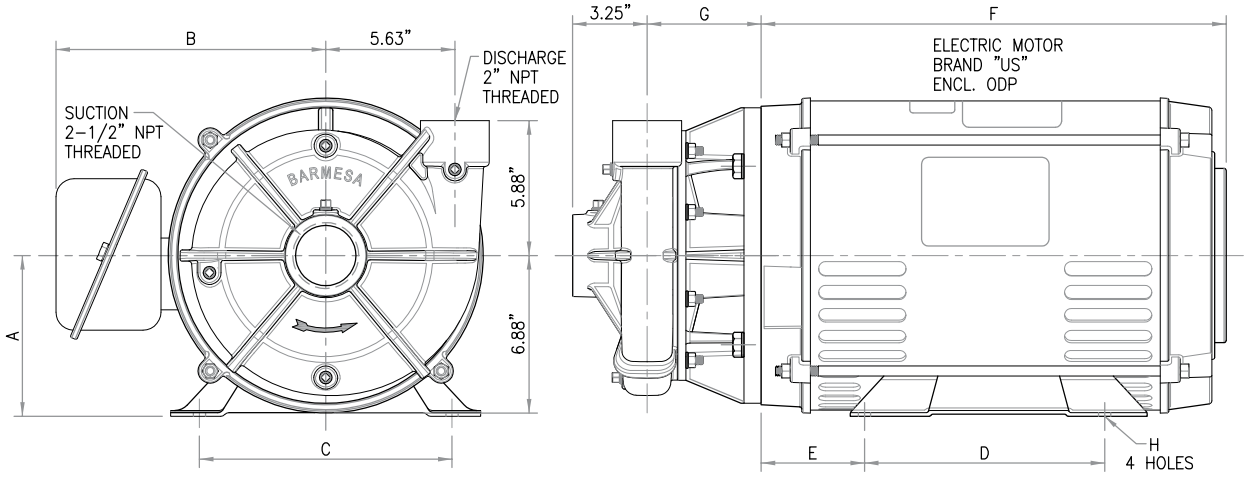

MODEL	CODE	HP	RPM	PHASE	FRAME	A	B	C	D	E	F	G	H
IA2–2–4		2	1735	3	145JM	3.50	6.88	5.50	5.00	2.75	12.00	4.03	0.34
IA2–10–2		10	3505	3	215JM	5.25	7.60	8.50	7.00	4.25	14.75	4.28	0.41
IA2–15–2		15	3530	3	254JM	6.25	10.0	10.0	8.25	4.50	19.06		0.53
IA2–20–2		20	3525	3	256JM				10.0		19.65	4.03	
IA2–25–2		25	3525	3	284JM	7.00	11.75	11.0	9.50	4.75	20.50	5.00	0.53
IA2–30–2		30	3525	3	286JM				11.0				
IA2H–25–2		25	3525	3	284JM				9.50				
IA2H–30–2		30	3525	3	286JM				11.0				

ALL DIMENSIONS ARE IN INCHES.

HIGH PRESSURE CENTRIFUGAL PUMP
MODEL IA2 & IA2H
GENERAL DIMENSIONS

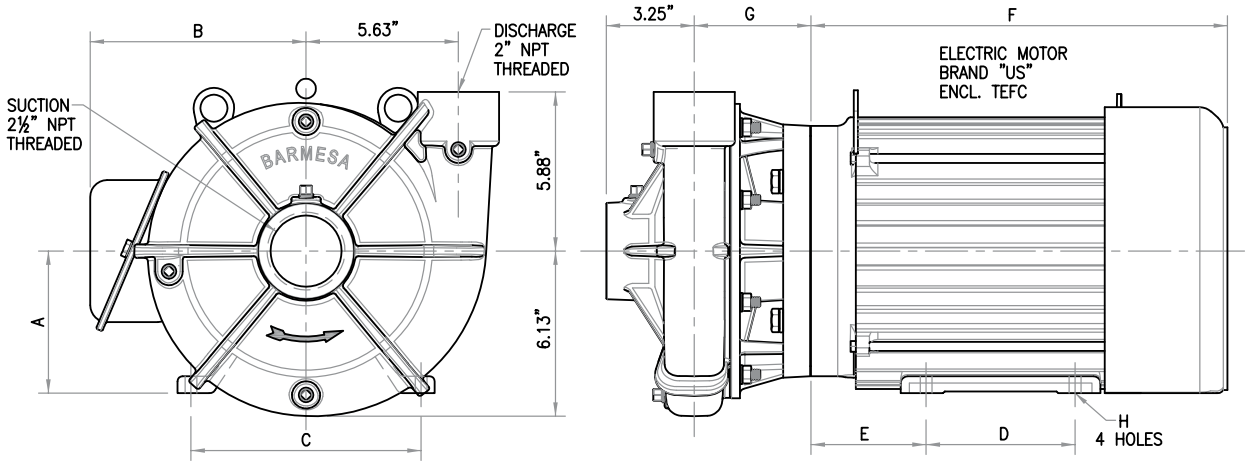

MODEL	HP	RPM	PHASE	FRAME	A	B	C	D	E	F	G	H
IA2-10-2	10	3525	3	215JM	5.25	8.25	8.50	7.00	4.25	17.13	4.54	0.44
IA2-15-2	15	3525										
IA2-20-2	20	3535	3	256JM	6.25	9.94	10.0	10.0	4.25	21.88	4.54	0.53
IA2-25-2	25	3555	3	284JM	7.00	13.1	11.0	9.50	4.75	22.63	5.00	0.53
IA2-30-2	30	3560	3	286JM				11.0				
IA2H-25-2	25	3555	3	284JM	7.00	13.1	11.0	9.50	4.75	22.63	5.00	0.53
IA2H-30-2	30	3560	3	286JM				11.0				

ALL DIMENSIONS ARE IN INCHES.

barmesapumps.com

HIGH PRESSURE CENTRIFUGAL PUMP
MODEL IA2-1/2
GENERAL DIMENSIONS

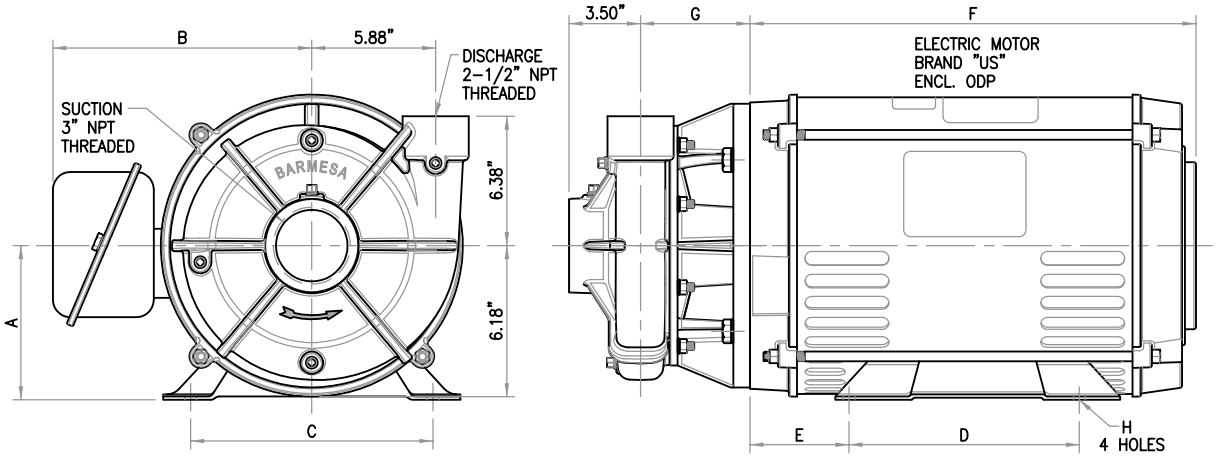

MODEL	CODE	HP	RPM	PHASE	FRAME	A	B	C	D	E	F	G	H
IA2 1/2-3-4		3	1740	3	182JM	4.50	6.88	7.50	4.50	3.63	11.81	4.47	0.41
IA2 1/2-5-4		5	1730	3	184JM				5.50				
IA2 1/2-10-2		10	3505	3	215JM	5.25	7.60	8.50	7.00	4.25	15.00	4.72	0.41
IA2 1/2-15-2		15	3530	3	254JM	6.25	10.00	10.00	8.25	4.75	19.31		0.53
IA2 1/2-20-2		20	3525	3	256JM				10.00				
IA2 1/2-25-2		25	3525	3	284JM	7.00	11.75	11.00	9.50	4.75	20.50	5.44	0.53
IA2 1/2-30-2		30	3525	3	286JM				11.00				
IA2 1/2-40-2		40	3530	3	324JM	8.00	14.75	12.50	10.50	5.25	22.25		0.69

ALL DIMENSIONS ARE IN INCHES.

HIGH PRESSURE CENTRIFUGAL PUMP
MODEL IA2½, GENERAL DIMENSIONS

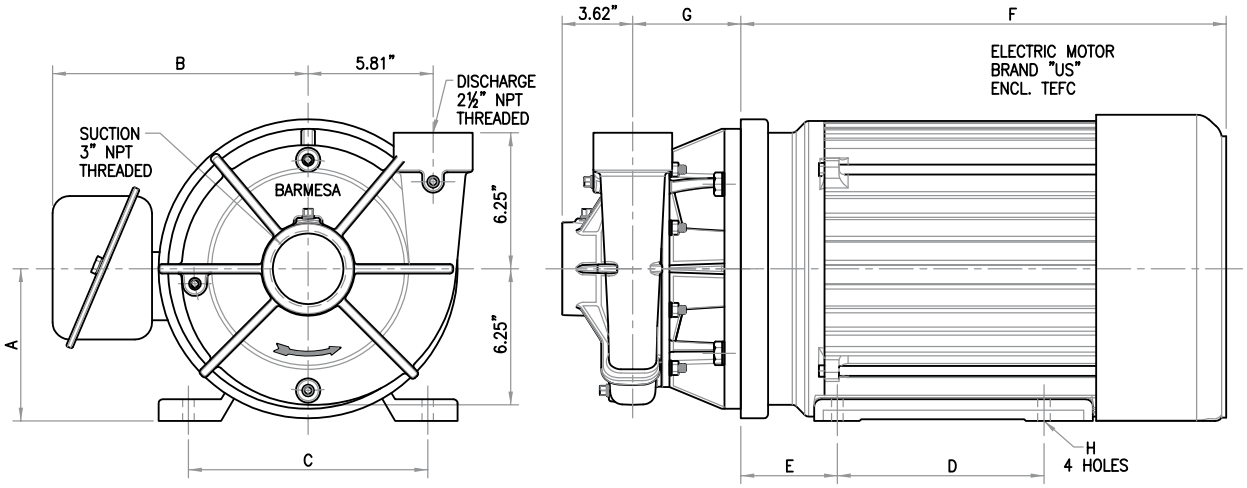

MODEL	HP	RPM	PHASE	FRAME	A	B	C	D	E	F	G	H
IA2½-3-4	3	1740	3	182JM	4.50	7.50	7.50	4.50	3.63	13.56	4.25	0.41
IA2½-5-4	5	1750	3	184JM				5.50				
IA2½-10-2	10	3525	3	215JM	5.25	8.25	8.50	7.00	4.25	17.13	4.54	0.44
IA2½-15-2	15											
IA2½-20-2	20	3525	3	256JM	6.25	9.94	10.00	10.00	4.25	21.88		0.53
IA2½-25-2	25	3555	3	284JM	7.00	13.10	11.00	9.50	4.75	22.63	5.00	0.53
IA2½-30-2	30	3560	3	286JM				11.00				
IA2½-40-2	40	3565	3	324JM	8.00	15.50	12.50	10.50	5.25	25.62		0.66

ALL DIMENSIONS ARE IN INCHES.

barmesapumps.com

HIGH PRESSURE CENTRIFUGAL PUMP
MODEL IA2½H GENERAL DIMENSIONS

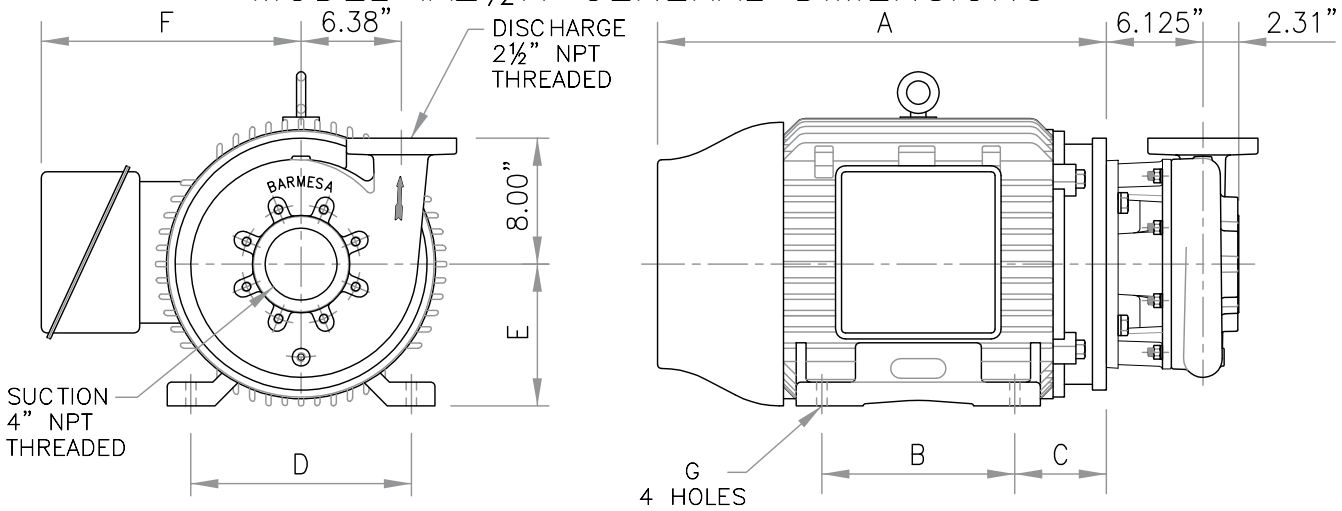

MODEL	HP	RPM	PHASE	FRAME	A	B	C	D	E	F	G
IA2½H-40-2	40	3600	3	324JM	24"	10.5"	5"	12.5"	8"	12"	0.66"
IA2½H-50-2	50	3600	3	326JM	25.52	12"					
IA2½H-60-2	60	3600	3	364JM	28"	11.25"	5.75"	14"	9"	16.5"	0.66"
IA2½H-75-2	75	3600	3	365JM	29"	12.25"					
IA2½H-100-2	100	3600	3	405JM	32"	13.75"	5.75"	16"	10"	17.25"	0.81"

HIGH PRESSURE CENTRIFUGAL PUMP
MODEL IA3 & IA3H
GENERAL DIMENSIONS

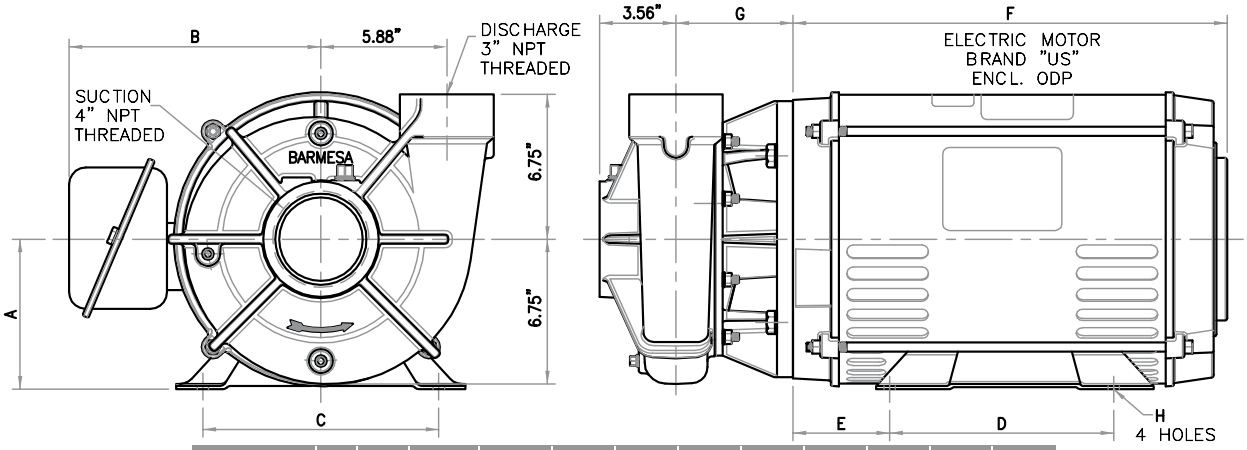

MODEL	HP	RPM	PHASE	FRAME	A	B	C	D	E	F	G	H
IA3-3-4	3	1740	3	182JM	4.5"	6.88"	7.5"	4.5"	3.63"	11.81"	4.53"	0.41"
IA3-5-4	5	1730	3	184JM				5.5"				
IA3-7.5-4	7.5	1750	3	213JM	5.25"	7.6"	8.5"		4.25"	13.5"	4.78"	
IA3-15-2	15	3530	3	254JM	6.25"	10"	10"	8.25"	4.75"	19.31"	5.53"	0.53"
IA3-20-2	20	3525	3	256JM				10"		19.94"		
IA3-25-2	25	3525	3	284JM	7"	11.75"	11"	9.5"		20.5"	5.46"	
IA3-30-2	30	3525	3	286JM				11"				
IA3-40-2	40	3530	3	324JM	8"	14.75"	12.5"	10.5"	5.25"	22.25"		0.69"
IA3-50-2	50	3530	3	326JM				12"				
IA3H-30-2	30	3525	3	286JM	7"	11.75"	11"	11"	4.75"	20.5"		0.53"
IA3H-40-2	40	3530	3	324JM	8"	14.75"	12.5"	10.5"	5.25"	22.25"	5.46"	0.69"
IA3H-50-2	50	3530	3	326JM				12"				
IA3H-60-2	60	3565	3	364JM	9"	16.31"	14"	11.25"	5.88"	23"		
IA3H-75-2	75	3565	3	365JM				12.25"		24"		

HIGH PRESSURE CENTRIFUGAL PUMP
MODEL IA3U GENERAL DIMENSIONS

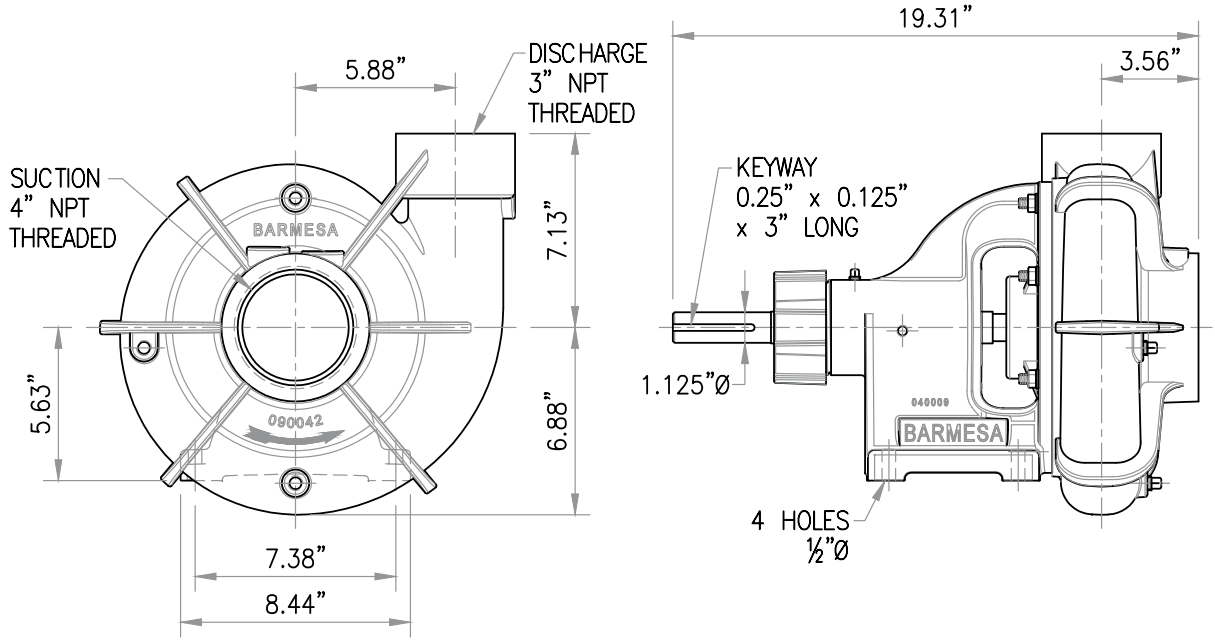

barmesapumps.com

HIGH PRESSURE CENTRIFUGAL PUMP
MODEL IA4 GENERAL DIMENSIONS

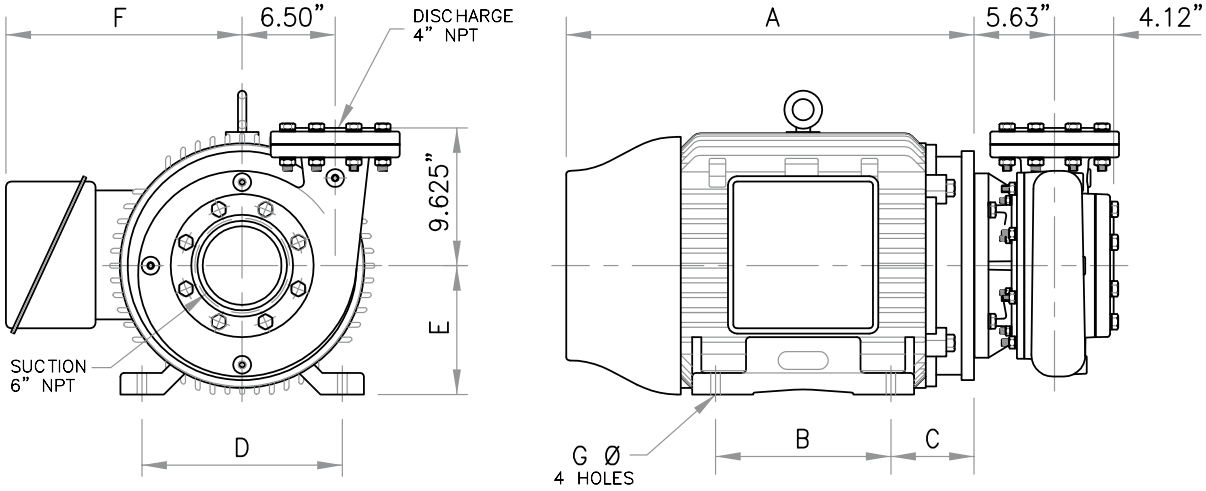

MODEL	HP	RPM	PHASE	FRAME	A	B	C	D	E	F	G
IA4-40-2	40	3530	3	324TSC	24"	10.5"	5"	12.5"	8"	12"	0.66"
IA4-50-2	50	3530	3	326TSC	25.5"	12"					
IA4-60-2	60	3565	3	364TSC	28"	11.25"	5.75"	14"	9"	16.5"	0.66"
IA4-75-2	75	3555	3	365TSC	29"	12.25"					
IA4-100-2	100	3560	3	405TSC	30.5"	13.75"	6.38"	16"	10"	18.75"	0.81"
IA4-125-2	125	3570	3	444TSC	37.75"	14.5"	8.75"	18"	11"		

barnesaupumps.com

CENTRIFUGAL PUMP IA4–7.5–4
GENERAL DIMENSIONS

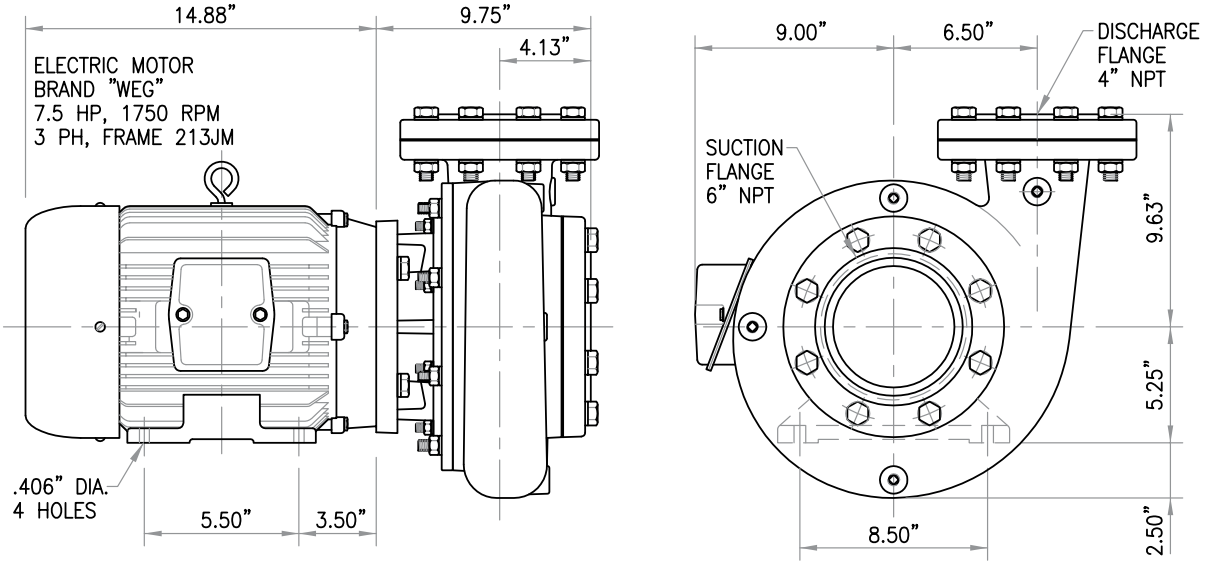

CENTRIFUGAL PUMP IA4BJH
GENERAL DIMENSIONS

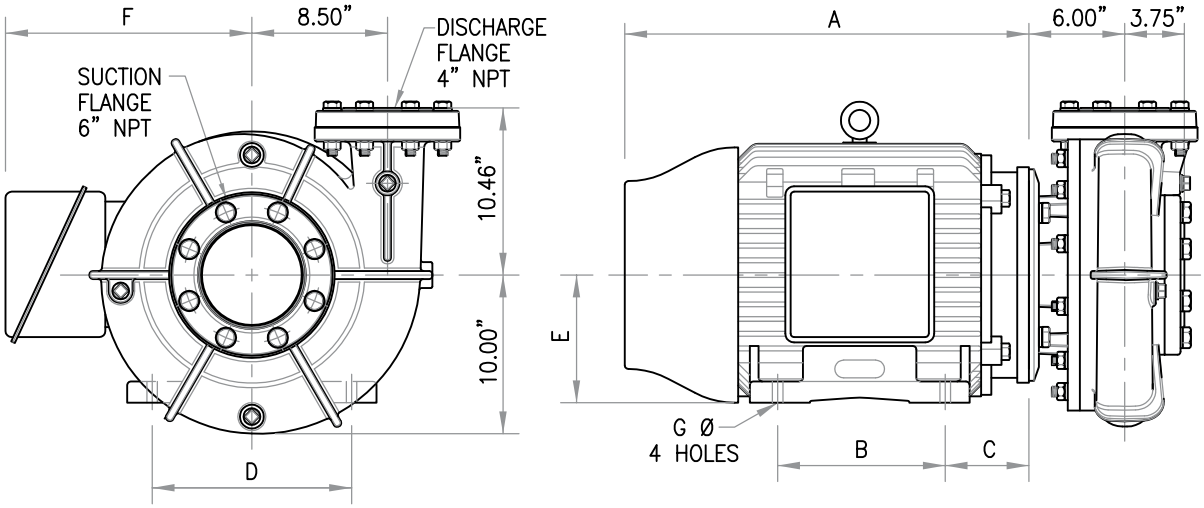

MODEL	HP	RPM	PHASE	FRAME	A	B	C	D	E	F
IA4BJH-20-4	20	1745	3	256JM	20.25"	10"	4.25"	10"	6.25"	9.9"
IA4BJH-25-4	25	1760	3	284JM	22.62"	9.5"	4.75"	11"	7"	12.94"
IA4BJH-30-4	30	1760	3	286JM	24.56"	11"				
IA4BJH-40-4	40	1765	3	324JM	25.31"	10.5"	5.25"	12.5"	8"	15.44"
IA4BJH-50-4	50	1765	3	326JM	25.31"	12"				
IA4BJH-60-4	60	1765	3	364JM	27"	11.25"	5.88"	14"	9"	16.44"

barnesapumps.com

CENTRIFUGAL PUMP IA6BJM–40–4
GENERAL DIMENSIONS

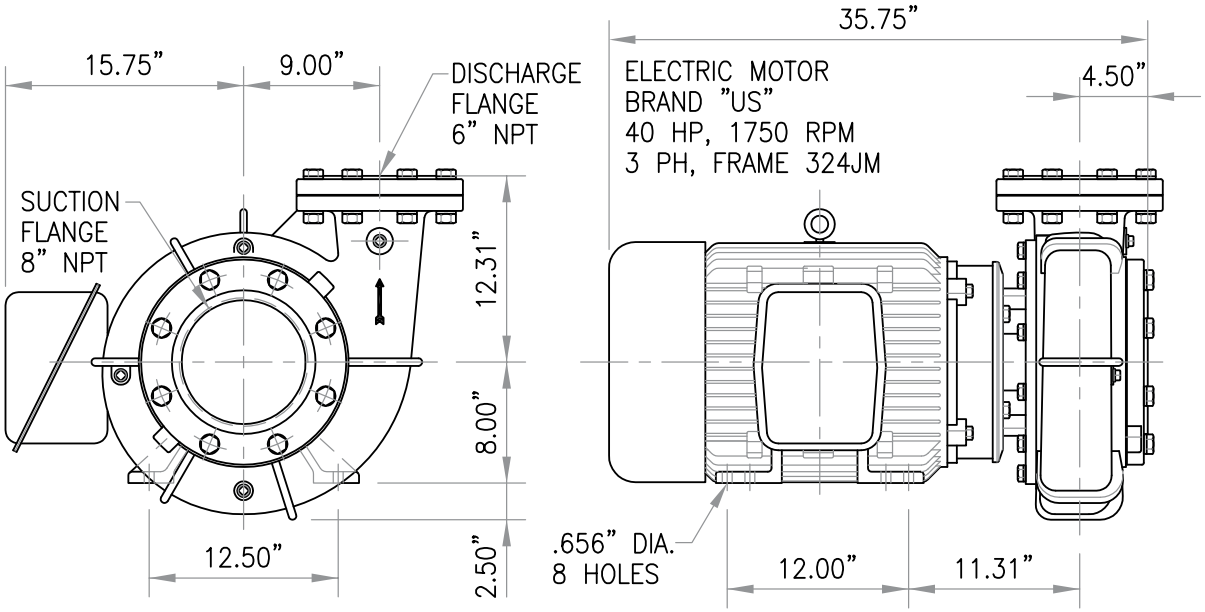

TYPICAL EXPLODED VIEW CENTRIFUGAL PUMP

MODELS;
* IA1
* IA1–1/2
* IA1–1/2H
* IA2
* IA2H
* IA2–1/2
* IA3
* IA3H

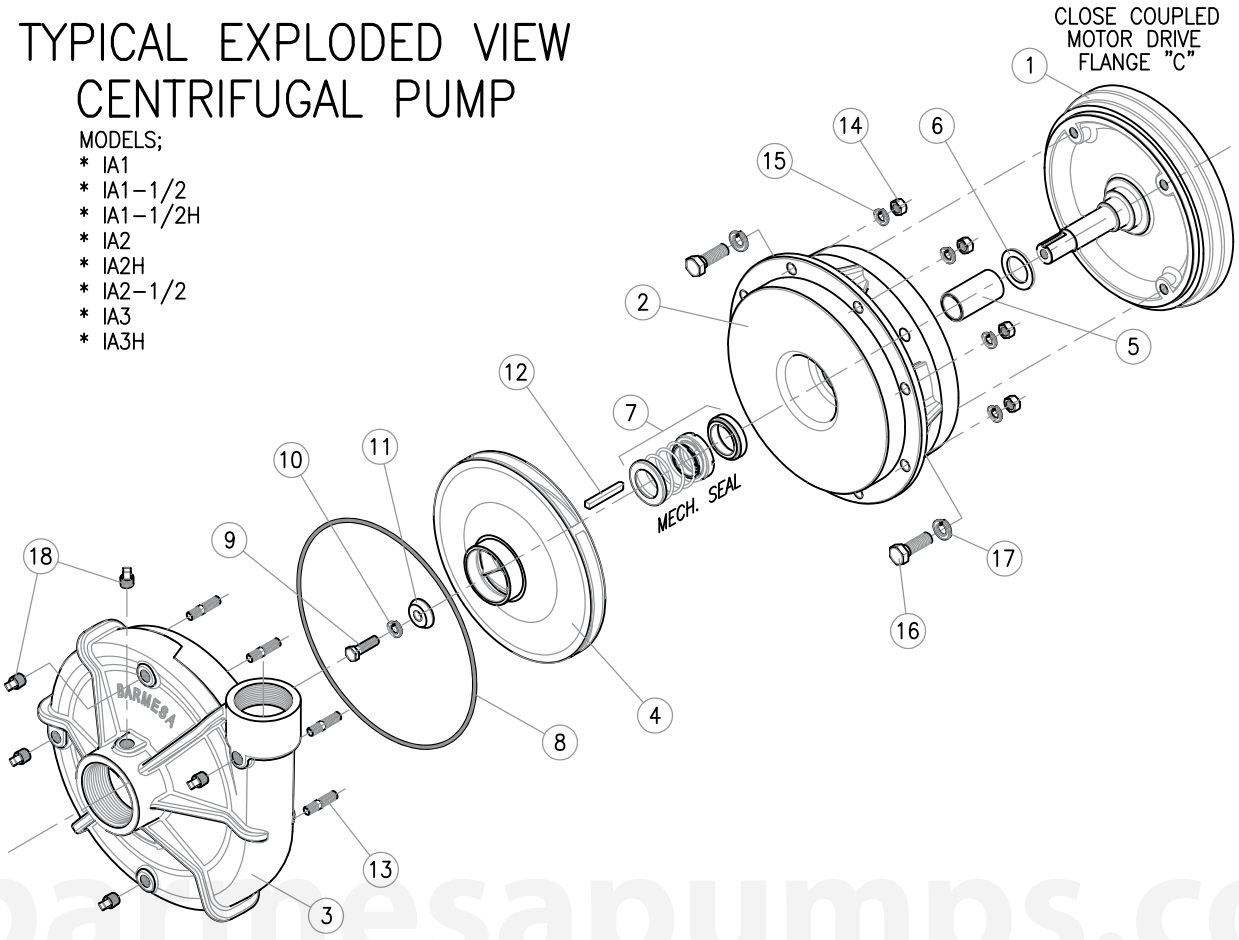

barmesapumps.com

IA1

ITEM	QTY.	DESCRIPTION	# PART
1	1	ELECTRIC MOTOR, 200-230/460, ODP	
		2 HP, 1750 RPM, 3 PH, FRAME 145T JM	
		3 HP, 3510 RPM, 3 PH, FRAME 182T JM	
		5 HP, 3490 RPM, 3 PH, FRAME 184T JM	
		7.5 HP, 3515 RPM, 3 PH, FRAME 213T JM	
2	1	INTERMEDIATE COUPLING, FOR 2 TO 5 HP	03010028
		INTERMEDIATE COUPLING, FOR 7.5 HP	03010018
3	1	VOLUTE CASE	03090038
4	1	IMPELLER IA1-3-2, Ø5.75"	03140031
		IMPELLER IA1-5-2, Ø6.81"	03140031B
		IMPELLER IA1-2-4 & IA1-7.5-2, Ø7.50"	03140031C
5	1	SHAFT SLEEVE	30400808
6	1	SLINGER	92010014
7	1	MECHANICAL SEAL	31030131
8	1	O-RING	92010033
9	1	IMPELLER'S SCREW	91010345C
10	1	LOCK WASHER 3/8" SS	91010061
11	1	IMPELLER WASHER	30400418
12	1	SHAFT KEY	30400631
13	8	STUD 3/8-16X 1.50"	91010303
14	8	HEX NUT 3/8"	91010413
15	8	LOCK WASHER 3/8" STEEL	91010012
16	4	CAP SCREW 3/8-16 X 1.25"	91010243
		CAP SCREW 1/2-13 X 1.50"	91010263
17	4	LOCK WASHER 3/8" STEEL	91010012
		LOCK WASHER 1/2" STEEL	91010014
18	5	PIPE PLUG 1/4" NPT	93010143

IA1½

ITEM	QTY.	DESCRIPTION	# PART
1	1	ELECTRIC MOTOR, 200-230/460, ODP	
		5 HP, 3490 RPM, 3 PH, FRAME 184T JM	
		7.5 HP, 3515 RPM, 3 PH, FRAME 213T JM	
		10 HP, 3505 RPM, 3 PH, FRAME 215T JM	
		15 HP, 3530 RPM, 3 PH, FRAME 254T JM	
		20 HP, 3525 RPM, 3 PH, FRAME 256T JM	
2	1	INTERMEDIATE COUPLING, FOR 5 HP	03010028
		INTERMEDIATE COUPLING, FOR 7.5 TO 15 HP	03010018
		INTERMEDIATE COUPLING, FOR 20 HP	03010051
3	1	VOLUTE CASE	03090039
4	1	IMPELLER IA1½-5-2, Ø6.22"	03140032
		IMPELLER IA1½-7.5-2, Ø7.13"	03140032B
		IMPELLER IA1½-10-2, Ø8.00"	03140032C
		IMPELLER IA1½-15 & 20-2, Ø9.00"	03140032E
5	1	SHAFT SLEEVE, FOR 5 TO 10 HP	30400808
		SHAFT SLEEVE, FOR 15 & 20 HP	30400812
6	1	SLINGER, FOR 5 TO 10 HP	92010014
		SLINGER, FOR 15 & 20 HP	92010016
7	1	MECH. SEAL, FOR 5 TO 10 HP	31030131
		MECH. SEAL, FOR 15 & 20 HP	31030133
8	1	O-RING	92010033
9	1	IMPELLER'S SCREW, FOR 5 TO 10 HP	91010345C
		IMPELLER'S SCREW, FOR 15 & 20 HP	91010351
10	1	LOCK WASHER, 3/8" SS, FOR 5 TO 10 HP	91010061
		LOCK WASHER, 1/2" SS, FOR 15 & 20 HP	91010062
11	1	IMPELLER WASHER, FOR 5 TO 10 HP	30400418
		IMPELLER WASHER, FOR 15 & 20 HP	30400416
12	1	SHAFT KEY, FOR 5 TO 10 HP	30400631
		SHAFT KEY, FOR 15 & 20 HP	30400633
13	8	STUD 3/8-16X 1.50"	91010303
14	8	HEX NUT 3/8"	91010413
15	8	LOCK WASHER 3/8"	91010012
16	4	CAP SCREW, 3/8-16 X 1.25" FOR 5 TO 10 HP	91010243
		CAP SCREW, 1/2-13 X 1.50" FOR 15 & 20 HP	91010263
17	4	LOCK WASHER, 3/8" STEEL, FOR 5 TO 10 HP	91010012
		LOCK WASHER, 1/2" STEEL, FOR 15 & 20 HP	91010014
18	5	PIPE PLUG 1/4" NPT	93010143

IA1½H

ITEM	QTY.	DESCRIPTION	# PART
1	1	ELECTRIC MOTOR, 200-230/460, ODP	
		3 HP, 1740 RPM, 3 PH, FRAME 182T JM	
		15 HP, 3530 RPM, 3 PH, FRAME 254T JM	
		20 HP, 3525 RPM, 3 PH, FRAME 256T JM	
		25 HP, 3530 RPM, 3 PH, FRAME 284T JM	
		30 HP, 3525 RPM, 3 PH, FRAME 286T JM	
2	1	INTERMEDIATE COUPLING, FOR 3 HP	03010028
		INTERMEDIATE COUPLING, FOR 15 HP	03010018
		INTERMEDIATE COUPLING, FOR 20 HP	03010051
		INTERMEDIATE COUPLING, FOR 25 & 30 HP	03010020
3	1	VOLUTE CASE	03090039B
4	1	IMPELLER IA1½H-15-2, Ø7.94" (SHAFT Ø1¼")	03140065
		IMPELLER IA1½H-20-2, Ø8.63" (SHAFT Ø1¼")	03140065B
		IMPELLER IA1½H-25 & 30-2, Ø9.00"	03140065C
		IMPELLER IA1½H-3-4, Ø9.00" (SHAFT Ø7/8")	03140032G
5	1	SHAFT SLEEVE, FOR 3 HP TO 20 HP	30400808
		SHAFT SLEEVE, FOR 25 TO 30 HP	30400812
6	1	SLINGER, FOR 3 HP TO 20 HP	92010014
		SLINGER, FOR 25 & 30 HP	92010016
7	1	MECH. SEAL, FOR 3 TO 20 HP	31030131
		MECH. SEAL, FOR 25 & 30 HP	31030133
8	1	O-RING	92010033
9	1	IMPELLER'S SCREW, FOR 3 TO 20 HP	91010345C
		IMPELLER'S SCREW, FOR 25 & 30 HP	91010351
10	1	LOCK WASHER, 3/8" SS, FOR 3 TO 20 HP	91010061
		LOCK WASHER, 1/2" SS, FOR 25 & 30 HP	91010062
11	1	IMPELLER WASHER, FOR 3 TO 20 HP	30400418
		IMPELLER WASHER, FOR 25 & 30 HP	30400416
12	1	SHAFT KEY, FOR 3 TO 20 HP	30400631
		SHAFT KEY, FOR 25 & 30 HP	30400633
13	8	STUD 3/8-16X 1.50"	91010303
14	8	HEX NUT 3/8"	91010413
15	8	LOCK WASHER 3/8"	91010012
16	4	CAP SCREW, 3/8-16 X 1.25" FOR 3 HP	91010243
		CAP SCREW, 1/2-13 X 1.50" FOR 15 & 20 HP	91010263
		CAP SCREW, 5/8-11 X 1.50" FOR 25 & 30 HP	91010282
17	4	LOCK WASHER, 3/8" STEEL, FOR 3 HP	91010012
		LOCK WASHER, 1/2" STEEL, FOR 15 & 20 HP	91010014
		LOCK WASHER, 5/8" STEEL, FOR 25 TO 30 HP	91010015
18	5	PIPE PLUG 1/4" NPT	93010143

barrsapulveda

IA2

ITEM	QTY.	DESCRIPTION	# PART
1	1	ELECTRIC MOTOR, 200-230/460, ODP	
		2 HP, 1750 RPM, 3 PH, FRAME 145T JM	
		10 HP, 3505 RPM, 3 PH, FRAME 215T JM	
		15 HP, 3530 RPM, 3 PH, FRAME 254T JM	
		20 HP, 3525 RPM, 3 PH, FRAME 256T JM	
		25 HP, 3525 RPM, 3 PH, FRAME 284T JM	
		30 HP, 3525 RPM, 3 PH, FRAME 286T JM	
2	1	INTERMEDIATE COUPLING, FOR 2 HP, 1750 RPM	03010028
		INTERMEDIATE COUPLING, FOR 10 & 15 HP, 3500 RPM	03010018
		INTERMEDIATE COUPLING, FOR 20 HP, 3525 RPM	03010051
		INTERMEDIATE COUPLING, FOR 25 & 30 HP, 3525 RPM	03010020
3	1	VOLUTE CASE	03090040
4	1	IMPELLER IA2 FOR 2 HP, DIA. 9.00"	03140033G
		IMPELLER IA2-10-2, DIA. 7.56"	03140033
		IMPELLER IA2-15-2, DIA. 8.31"	03140033B
		IMPELLER IA2 FOR 20 TO 30 HP, DIA. 9.00"	03140033C
5	1	SHAFT SLEEVE, FOR 2 & 15 HP	30400808
		SHAFT SLEEVE, FOR 20 TO 30 HP	30400812
6	1	SLINGER, FOR 2 TO 15 HP, 1¼"Ø	92010014
		SLINGER, FOR 20 TO 30 HP, 1¾"Ø	92010016
7	1	MECH. SEAL, FOR 2 TO 15 HP	31030131
		MECH. SEAL, FOR 20 TO 30 HP	31030133
8	1	O-RING	92010033
9	1	IMPELLER'S SCREW, FOR 2 TO 15 HP	91010345C
		IMPELLER'S SCREW, FOR 20 TO 30 HP	91010351
10	1	LOCK WASHER, 3/8" SS, FOR 2 TO 15 HP	91010061
		LOCK WASHER, ½" SS, FOR 20 TO 30 HP	91010062
11	1	IMPELLER WASHER, FOR 2 TO 15 HP	30400418
		IMPELLER WASHER, FOR 20 TO 30 HP	30400416
12	1	SHAFT KEY, FOR 2 TO 15 HP	30400631
		SHAFT KEY, FOR 20 TO 30 HP	30400633
13	8	STUD 3/8"-16 X 1½"	91010303
14	8	HEX NUT 3/8"	91010413
15	8	LOCK WASHER 3/8"	91010012
16	4	CAP SCREW, 3/8"-16 X 1¼" FOR 2 HP	91010243
		CAP SCREW, ½"-13 X 1½" FOR 10 TO 20 HP	91010263
		CAP SCREW, 5/8"-11 X 1½" FOR 25 & 30 HP	91010282
17	4	LOCK WASHER, 3/8" STEEL, FOR 2 HP	91010012
		LOCK WASHER, ½" STEEL, FOR 10 TO 20 HP	91010014
		LOCK WASHER, 5/8" STEEL, FOR 25 & 30 HP	91010015
18	5	PIPE PLUG ¼" NPT	93010143

IA2H

ITEM	QTY.	DESCRIPTION	# PART
1	1	ELECTRIC MOTOR, 200-230/460, ODP	
		25 HP, 3525 RPM, 3 PH, FRAME 284T JM	
		30 HP, 3525 RPM, 3 PH, FRAME 286T JM	
2	1	INTERMEDIATE COUPLING, FOR 25 & 30 HP	03010020
3	1	VOLUTE CASE	03090040B
4	1	IMPELLER IA2H-25-2, Ø8.63"	03140034H
		IMPELLER IA2H-30-2, Ø9.00"	03140034I
5	1	SHAFT SLEEVE	30400812
6	1	SLINGER	92010016
7	1	MECHANICAL SEAL	31030133
8	1	O-RING	92010033
9	1	IMPELLER'S SCREW	91010351
10	1	LOCK WASHER 1/2" SS	91010062
11	1	IMPELLER WASHER	30400416
12	1	SHAFT KEY	30400633
13	8	STUD 3/8-16 X 1.50"	91010303
14	8	HEX NUT 3/8"	91010413
15	8	LOCK WASHER 3/8"	91010012
16	4	CAP SCREW 5/8-11 X 1.50"	91010282
17	4	LOCK WASHER 5/8" STEEL	91010015
18	5	PIPE PLUG 1/4" NPT	93010143

IA2½

ITEM	QTY.	DESCRIPTION	# PART
1	1	ELECTRIC MOTOR, 200-230/460, ODP	
		3 HP, 1740 RPM, 3 PH, FRAME 182T JM	
		5 HP, 1730 RPM, 3 PH, FRAME 184T JM	
		10 HP, 3505 RPM, 3 PH, FRAME 215T JM	
		15 HP, 3530 RPM, 3 PH, FRAME 254T JM	
		20 HP, 3525 RPM, 3 PH, FRAME 256T JM	
		25 HP, 3525 RPM, 3 PH, FRAME 284T JM	
		30 HP, 3525 RPM, 3 PH, FRAME 286T JM	
		40 HP, 3530 RPM, 3 PH, FRAME 324T JM	
2	1	INTERMEDIATE COUPLING, FOR 2 HP, 1750 RPM	03010028
		INTERMEDIATE COUPLING, FOR 10 & 15 HP, 3500 RPM	03010018
		INTERMEDIATE COUPLING, FOR 20 HP, 3525 RPM	03010051
		INTERMEDIATE COUPLING, FOR 25 & 30 HP, 3525 RPM	03010020
3	1	VOLUTE CASE	03090041
4	1	IMPELLER IA2½ FOR 3 HP, Ø9.00" (SHAFT Ø7/8")	03140034K
		IMPELLER IA2½ FOR 5 HP, Ø9.00" (SHAFT Ø7/8")	03140034K
		IMPELLER IA2½ FOR 10 HP, Ø6.94" (SHAFT Ø7/8")	03140034
		IMPELLER IA2½ FOR 15 HP, Ø6.94" (SHAFT Ø1¼")	03140034
		IMPELLER IA2½ FOR 20 HP, Ø7.69" (SHAFT Ø1¼")	03140034B
		IMPELLER IA2½ FOR 25 HP, Ø8.44" (SHAFT Ø1¼")	03140034C
		IMPELLER IA2½ FOR 30 HP, Ø8.88" (SHAFT Ø1¼")	03140034D
		IMPELLER IA2½ FOR 40 HP, Ø9.00" (SHAFT Ø1¼")	03140034E
5	1	SHAFT SLEEVE, FOR 3 & 10 HP	30400808
		SHAFT SLEEVE, FOR 15 TO 40 HP	30400812
6	1	SLINGER, FOR 3 TO 10 HP, Ø1¼"	92010014
		SLINGER, FOR 15 TO 40 HP, Ø1¾"	92010016
7	1	MECH. SEAL, FOR 3 TO 10 HP	31030131
		MECH. SEAL, FOR 15 TO 40 HP	31030133
8	1	O-RING	92010033
9	1	IMPELLER'S SCREW, FOR 3 TO 10 HP	91010345C
		IMPELLER'S SCREW, FOR 15 TO 40 HP	91010351
10	1	LOCK WASHER, 3/8" SS, FOR 3 TO 10 HP	91010061
		LOCK WASHER, 1/2" SS, FOR 15 TO 40 HP	91010062
11	1	IMPELLER WASHER, FOR 3 TO 10 HP	30400418
		IMPELLER WASHER, FOR 15 TO 40 HP	30400416
12	1	SHAFT KEY, FOR 3 HP TO 10 HP	30400631
		SHAFT KEY, FOR 15 TO 40 HP	30400633
13	8	STUD 3/8-16X 1.50"	91010303
14	8	HEX NUT 3/8"	91010413
15	8	LOCK WASHER 3/8"	91010012
16	4	CAP SCREW, 3/8-16 X 1.25" FOR 3 & 5 HP	91010243
		CAP SCREW, 1/2-13 X 1.50" FOR 10 TO 20 HP	91010263
		CAP SCREW, 5/8-11 X 1.50" FOR 25 TO 40 HP	91010282
17	4	LOCK WASHER, 3/8" STEEL, FOR 3 & 5 HP	91010012
		LOCK WASHER, 1/2" STEEL, FOR 10 TO 20 HP	91010014
		LOCK WASHER, 5/8" STEEL, FOR 25 & 40 HP	91010015
18	5	PIPE PLUG 1/4" NPT	93010143

bacosa.com

IA3

ITEM	QTY.	DESCRIPTION	# PART
1	1	ELECTRIC MOTOR, 200-230/460, ODP	
		3 HP, 1740 RPM, 3 PH, FRAME 182T JM	
		5 HP, 1730 RPM, 3 PH, FRAME 184T JM	
		7.5 HP, 1750 RPM, 3 PH, FRAME 213T JM	
		15 HP, 3530 RPM, 3 PH, FRAME 254T JM	
		20 HP, 3525 RPM, 3 PH, FRAME 256T JM	
		25 HP, 3525 RPM, 3 PH, FRAME 284T JM	
		30 HP, 3525 RPM, 3 PH, FRAME 286T JM	
		40 HP, 3530 RPM, 3 PH, FRAME 324T JM	
		50 HP, 3530 RPM, 3 PH, FRAME 326T JM	
2	1	INTERMEDIATE COUPLING, FOR 3 TO 5 HP, 1750 RPM	03010028
		INTERMEDIATE COUPLING, FOR 7.5 HP, 3500 RPM	03010018
		INTERMEDIATE COUPLING, FOR 15 & 20 HP, 3500 RPM	03010051
		INTERMEDIATE COUPLING, FOR 25 TO 50 HP, 3525 RPM	03010020
3	1	VOLUTE CASE	03090042
4	1	IMPELLER IA3 FOR 3 HP, Ø7.50" (SHAFT Ø7/8")	03140035I
		IMPELLER IA3 FOR 5 HP, Ø8.40" (SHAFT Ø7/8")	03140035J
		IMPELLER IA3 FOR 7.5 HP, Ø9.00" (SHAFT Ø7/8")	03140035H
		IMPELLER IA3 FOR 15 & 20 HP, Ø6.94" (SHAFT Ø1¼")	03140035B
		IMPELLER IA3 FOR 25 HP, Ø7.50" (SHAFT Ø1¼")	03140035C
		IMPELLER IA3 FOR 30 HP, Ø8.00" (SHAFT Ø1¼")	03140035D
		IMPELLER IA3 FOR 40 HP, Ø8.75" (SHAFT Ø1¼")	03140035E
		IMPELLER IA3 FOR 50 HP, Ø9.00" (SHAFT Ø1¼")	03140035F
5	1	SHAFT SLEEVE, FOR 3 TO 7.5 HP	30400808
		SHAFT SLEEVE, FOR 15 TO 50 HP	30400812
6	1	SLINGER, FOR 3 TO 7.5 HP, Ø1¼"	92010014
		SLINGER, FOR 15 TO 50 HP, Ø1¾"	92010016
7	1	MECH. SEAL, FOR 3 TO 7.5 HP	31030131
		MECH. SEAL, FOR 15 TO 50 HP	31030133
8	1	O-RING	92010033
9	1	IMPELLER'S SCREW, FOR 3 TO 7.5 HP	91010345C
		IMPELLER'S SCREW, FOR 15 TO 50 HP	91010351
10	1	LOCK WASHER, 3/8" SS, FOR 3 TO 7.5 HP	91010061
		LOCK WASHER, 1/2" SS, FOR 15 TO 50 HP	91010062
11	1	IMPELLER WASHER, FOR 3 TO 7.5 HP	30400418
		IMPELLER WASHER, FOR 15 TO 50 HP	30400416
12	1	SHAFT KEY, FOR 3 HP TO 7.5 HP	30400631
		SHAFT KEY, FOR 15 TO 50 HP	30400633
13	8	STUD 3/8-16X 1.50"	91010303
14	8	HEX NUT 3/8"	91010413
15	8	LOCK WASHER 3/8"	91010012
16	4	CAP SCREW, 3/8-16 X 1.25" FOR 3 & 5 HP	91010243
		CAP SCREW, 1/2-13 X 1.50" FOR 7.5 TO 20 HP	91010263
		CAP SCREW, 5/8-11 X 1.50" FOR 25 TO 50 HP	91010282
17	4	LOCK WASHER, 3/8" STEEL, FOR 3 & 5 HP	91010012
		LOCK WASHER, 1/2" STEEL, FOR 7.5 TO 20 HP	91010014
		LOCK WASHER, 5/8" STEEL, FOR 25 & 50 HP	91010015
18	1	PIPE PLUG 1/2" NPT	93010142
19	3	PIPE PLUG 1/4" NPT	93010143

IA3H

ITEM	QTY.	DESCRIPTION	# PART
1	1	ELECTRIC MOTOR, 200-230/460, ODP	
		30 HP, 3525 RPM, 3 PH, FRAME 286T JM	
		40 HP, 3530 RPM, 3 PH, FRAME 324T JM	
		50 HP, 3530 RPM, 3 PH, FRAME 326T JM	
		60 HP, 3565 RPM, 3 PH, FRAME 364T JM	
		75 HP, 3565 RPM, 3 PH, FRAME 365T JM	
2	1	INTERMEDIATE COUPLING, FOR 30 TO 75 HP, 3500 RPM	03010020
3	1	VOLUTE CASE	03090042
4	1	IMPELLER IA3H FOR 30 HP, Ø7.50" (SHAFT Ø1¼")	03140066B
		IMPELLER IA3H FOR 40 HP, Ø7.94" (SHAFT Ø1¼")	03140066C
		IMPELLER IA3H FOR 50 HP, Ø8.50" (SHAFT Ø1¼")	03140066D
		IMPELLER IA3H FOR 60 TO 75 HP, Ø9.0" (SHAFT Ø1¼")	03140066E
5	1	SHAFT SLEEVE, FOR 30 TO 75 HP	30400812
6	1	SLINGER, FOR 30 TO 75 HP, Ø1¾"	92010016
7	1	MECH. SEAL, FOR 30 TO 75 HP	31030133
8	1	O-RING	92010033
9	1	IMPELLER'S SCREW	91010351
10	1	LOCK WASHER, 1/2" SS	91010062
11	1	IMPELLER WASHER	30400416
12	1	SHAFT KEY, FOR 30 TO 75 HP	30400633
13	8	STUD 3/8-16X 1.50"	91010303
14	8	HEX NUT 3/8"	91010413
15	8	LOCK WASHER 3/8"	91010012
16	4	CAP SCREW, 5/8-11 X 1.50"	91010282
17	4	LOCK WASHER, 5/8" STEEL	91010015
18	1	PIPE PLUG 1/2" NPT	93010142
19	3	PIPE PLUG 1/4" NPT	93010143

bellmesapumps.com

TYPICAL EXPLODED VIEW
CENTRIFUGAL PUMP

MODEL
* IA1½XH

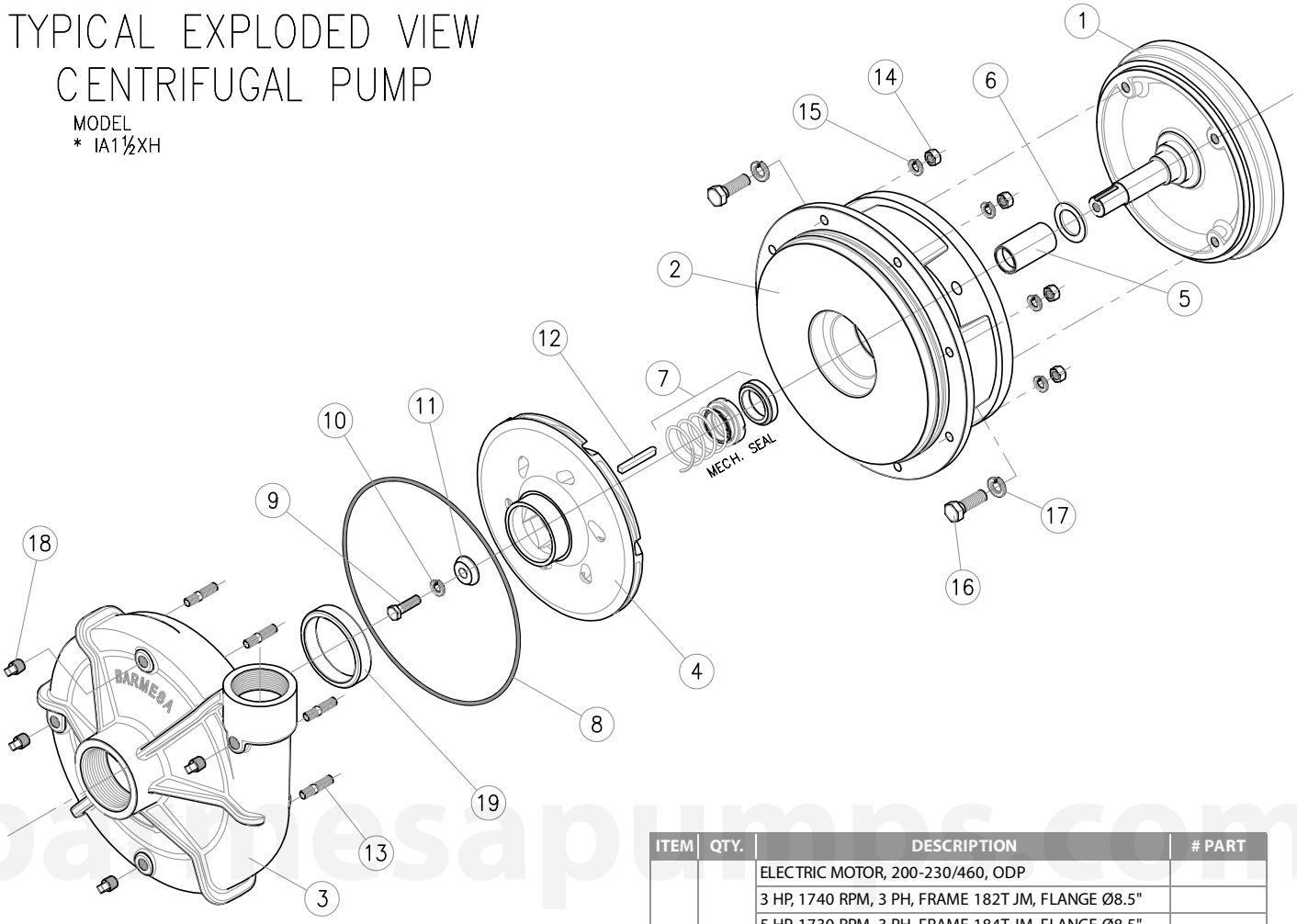

barmesapumps.com

ITEM	QTY.	DESCRIPTION	# PART
1	1	ELECTRIC MOTOR, 200-230/460, ODP	
		3 HP, 1740 RPM, 3 PH, FRAME 182T JM, FLANGE Ø8.5"	
		5 HP, 1730 RPM, 3 PH, FRAME 184T JM, FLANGE Ø8.5"	
		15 HP, 3530 RPM, 3 PH, FRAME 254T JM	
		20 HP, 3525 RPM, 3 PH, FRAME 256T JM	
		25 HP, 3530 RPM, 3 PH, FRAME 284T JM	
2	1	INTERMEDIATE COUPLING, FOR 3 TO 20 HP	03010050
		INTERMEDIATE COUPLING, FOR 25 HP	03010050B
3	1	VOLUTE CASE	03090079
4	1	IMPELLER IA1½XH-15-2, Ø7.25"	03140076
		IMPELLER IA1½XH-20-2, Ø8.38"	03140076B
		IMPELLER IA1½XH-25-2, Ø9.19"	03140076C
		IMPELLER IA1½XH-3-4, Ø9.19"	
		IMPELLER IA1½XH-5-4, Ø9.19"	
5	1	SHAFT SLEEVE, FOR 3 TO 25 HP	30400829
6	1	SLINGER, FOR 3 TO 25 HP	92010016
7	1	MECH. SEAL, FOR 3 TO 25 HP	31030133
8	1	O-RING	92010033
9	1	IMPELLER'S SCREW, FOR 3 TO 25 HP	91010351
10	1	LOCK WASHER, 1/2" SS, FOR 3 TO 25 HP	91010062
11	1	IMPELLER WASHER, FOR 3 TO 25 HP	30400416
12	1	SHAFT KEY, FOR 3 TO 25 HP	30400633
13	8	STUD 3/8-16X 1.50"	91010303
14	8	HEX NUT 3/8"	91010413
15	8	LOCK WASHER 3/8"	91010012
16	4	CAP SCREW, 1/2-13 X 1.50" FOR 3 & 20 HP	91010263
		CAP SCREW, 5/8-11 X 1.50" FOR 25 HP	91010282
17	4	LOCK WASHER, 1/2" STEEL, FOR 3 TO 20 HP	91010014
		LOCK WASHER, 5/8" STEEL, FOR 25 HP	91010015
18	4	PIPE PLUG 1/4" NPT	93010143
19	1	WEAR RING	30400324

TYPICAL EXPLODED VIEW
CENTRIFUGAL PUMP

MODEL
* IA2EXH-U

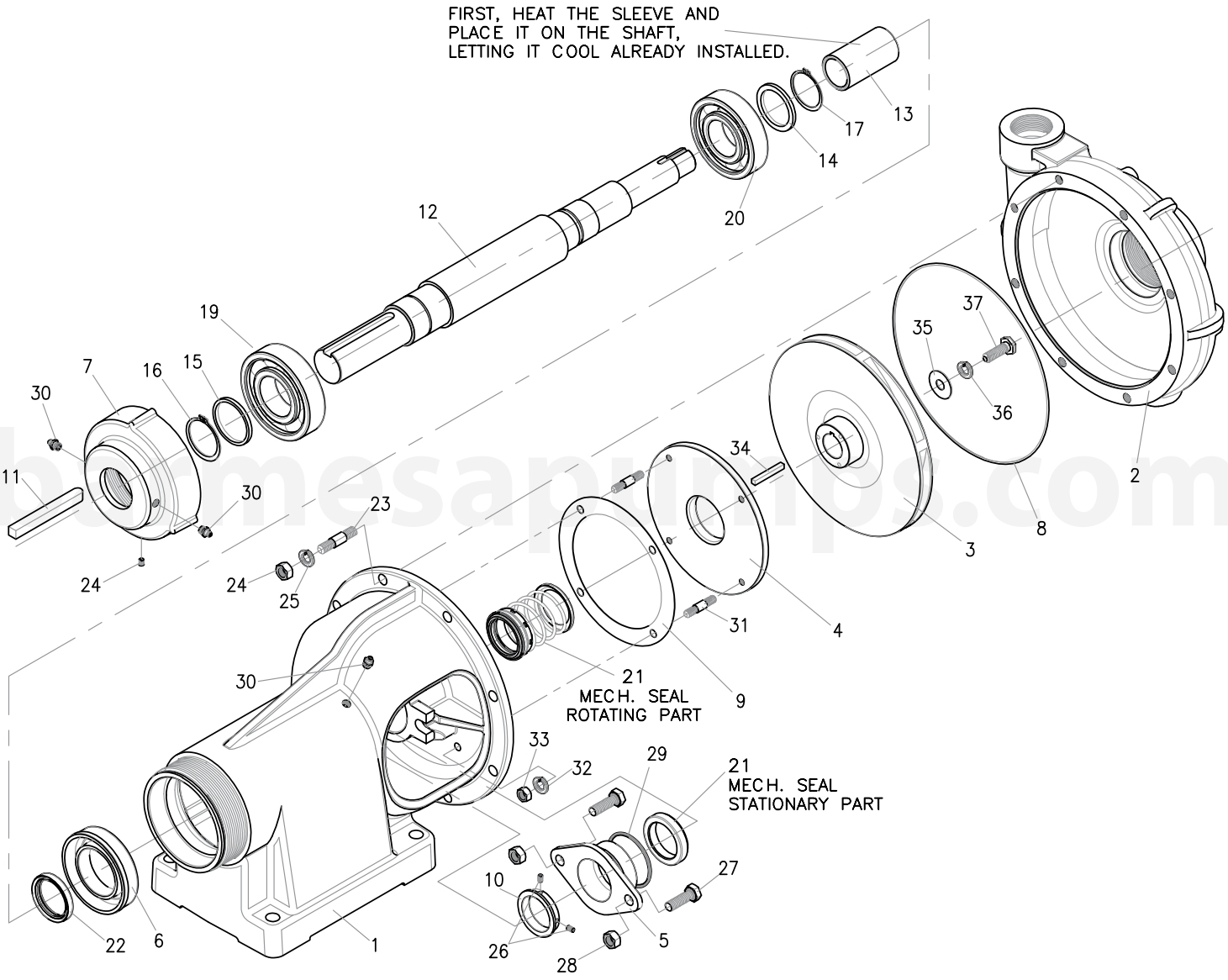

bombesapumps.com

ITEM	QTY.	DESCRIPTION	# PART	MATERIAL
1	1	Frame	03040010B	Cast Iron
2	1	Body	03090073	Cast Iron
3	1	Impeller	3140064D	Cast Iron
4	1	Wear plate	03190010	Cast Iron
5	1	Seal holder	03190101	Cast Iron
6	1	Retainer	03210003	Cast Iron
7	1	Nut	03250002	Cast Iron
8	1	O-Ring	92010033	Buna-N
9	1	Gasket	92010191	Vellumoid
10	1	Retainer washer	30400431	Bronze
11	1	Shaft key 1/2" x 1/2" x 4½"	30400632	Steel 1018
12	1	Shaft IA4U	30400719	Steel 4140
13	1	Shaft sleeve IA4U	30400810	SS 304
14	1	Inner separator	30400881	SS 304
15	1	Outer separator	30400882	SS 304
16	1	Retainer ring # 5100-215	31010005	Tempered Steel
17	1	Retainer ring # 5100-200	31010007	Tempered Steel
18		N/R		
19	1	Outer bearing	31020015	Steel
20	1	Inner bearing	31020017	Steel
21	1	Mechanical seal T21 de 1⅞" Ø	31030160	Carbon/Ceramic
22	1	Retainer CR # 19220	31150007	Steel/Viton
23	8	Cap screw 1/2"x 1¾"	91010309	Carbon Steel
24	8	Nut 1/2"	91010415	Carbon Steel
25	8	Pressure washer 1/2"	91010014	Carbon Steel
26	3	Oppressor 1/4"x 1/2" UNC	91010170	Carbon Steel
27	2	Square head screw 1/2"x 1½"	91010401B	Galvanized Steel
28	2	Nut 1/2"	91010454	Bronze
29	1	O-Ring # 2-230	92010078	Buna-N
30	3	Grase fitting 1/8" NPT	93010041	Material
31	4	Cap screw 3/8"x1½"	91010303	Carbon Steel
32	4	Pressure washer 3/8"	91010012	Galvanized Steel
33	4	Nut 3/8"	91010413	Galvanized Steel
34	1	Key 1/4"x 1/4"x 2"	30400633	Steel 1018
35	1	Impeller washer	30400416	Stainless Steel
36	1	Pressure washer 1/2"	91010062	Stainless Steel
37	1	Hex. Head screw 1/2"x 1½"	91010351	Stainless Steel
38	1/2 kg	Grase NLGI-2	98010043	Mineral Grase

barnesapumps.com

Risk of electric shock. Always disconnect the pump from the power source before handling inspections or repairs.

PROBLEM	PROBABLE CAUSE	CHECK
A) The pump does not prime, the vacuum gauge indicates a lower reading than normal.	1. Air leak in the suction system.	- Threaded joints in the suction tightness. - Gaskets for no wear. - The mechanical seal for leaks. - The drain plug has leaks. - The vacuum gauge may be leaking.
	2. Insufficient liquid in the pump casing.	- That the pump´s body is filled with water.
	3. Low operating speed.	- The motor speed (RPM).
	4. Bound pump.	- Impeller rotates freely. - Internal parts are clean.
	5. Mechanical defect.	- That the internal parts are not worn.
B) The pump does not prime, the vacuum gauge reading indicates higher than normal.	1. Pipe clogged suction.	- The suction line is clean.
C) The pump priming good vacuum gauge reading is normal, the manometer indicates a lower pressure than normal.	1. The pump speed is very low.	- The voltage is correct.
	2. Mechanical defects.	- The internal parts for wear.
D) The pump priming good vacuum gauge reading is almost normal, reading the manometer is greater.	1. Discharge obstructed.	- The discharge is clear of obstructions. - That the discharge valves operate correctly.
E) The pump loses its priming during operation, vacuum gauge reading drops to zero.	1. suction dynamic level too high.	- When the pump is operating, never lacks water in the suction.
	2. The pump is sucking air.	- For leaks in suction piping, flanges and gaskets.
		- That there is no vortex effect at the end of the suction, this lack of water.
F) The pump priming pumps well and satisfactorily but noisy.	1. Pump base is loose.	- That screws are tight at the base. - There are no cracks in the base.
	2. Cavitation.	- The dynamic level is not too high - That the pumping capacity is not too much. - The pump is operating in the range of NPSHR - If reducing flow makes the noise gone, then the problem is in the point above; partially close the discharge valve.
	3. Bearings.	- The bearings for wear. - That there is oil in the deposit.
	4. Vibration.	- The impeller does not have any foreign material. - The pump is operating in the range. - That the alignment is correct.
G) Motor overload.	1. Low Voltage.	- The voltage is correct.
	2. Overload.	- The amperage of the plate is not exceeded. - There is no foreign material that may force the impeller. - That the motor is suitable for the pump.

NOTE: Barmesa Pumps assumes no responsibility for damage or injury due to disassembly in the field. Disassembly of the pumps or supplied accessories other than at Barmesa Pumps or its authorized service centers, automatically voids warranty.

barmesapumps.com

BARMESA PUMPS
FACTORY WARRANTY

Barmesa Pumps warrants that products of our manufacture will be free of defects in material and workmanship under normal use and service for 18 months from date of manufacture or 12 months from installation date whichever occurs first. This warranty gives you specific legal rights, which vary from state to state.

This warranty is a limited warranty, and no warranty related claims of any nature whatsoever shall be made against Barmesa Pumps, until the ultimate consumer or his/her successor notifies us in writing of the defect and delivers the product and/or defective part(s) freight prepaid to our factory or nearest authorized service station as instructed by Barmesa Pumps. THERE SHALL BE NO FURTHER LIABILITY, WHETHER BASED ON WARRANTY, NEGLIGENCE OR OTHERWISE. PRODUCT SHALL BE EITHER REPLACED OR REPAIRED AT THE ELECTION OF BARMESA PUMPS. Guarantees relating to performance specifications provided in addition to the foregoing material and workmanship warranties on a product manufactured by Barmesa Pumps, if any, are subject to possible factory testing. Any additional guarantees, in the nature of certified performance specifications or time frame must be in writing and such writing must be signed by our authorized factory manager at time of order placement and/or at time of quotation. Due to inaccuracies in field testing and should a conflict arises between the results of field testing conducted by or for the user, Barmesa Pumps reserves the right to have the product returned to our factory for additional testing.

This warranty shall not apply when damage is caused by (1) improper installation, (2) improper voltage, (3) lightning, (4) excessive sand or other abrasive material, (5) corrosion build-up due to excessive chemical content or (6) uncontrollable acts of god. Any modification of the original equipment will also void the warranty. We will not be responsible for loss, damage or labor cost due to interruption of service caused by defective pumps, parts or systems. Barmesa Pumps will not accept charges incurred by others without our prior written approval.

This warranty is void if our inspection reveals the product was used in a manner inconsistent with normal industry practice and/or our specific recommendations. The purchaser is responsible for communication of all necessary information regarding the application and use of the product. UNDER NO CIRCUMSTANCES WILL WE BE RESPONSIBLE FOR ANY OTHER DIRECT OR CONSEQUENTIAL DAMAGES, INCLUDING BUT NOT LIMITED TO TRAVEL EXPENSES, CONTRACTOR FEES, UNAUTHORIZED REPAIR SHOP EXPENSES, LOST PROFITS, LOST INCOME, LABOR CHARGES, DELAYS IN PRODUCTION, IDLE PRODUCTION, WHICH DAMAGES ARE CAUSED BY ANY DEFECTS IN MATERIAL AND/OR WORKMANSHIP AND/OR DAMAGE OR DELAYS IN SHIPMENT. THIS WARRANTY IS EXPRESSLY IN LIEU OF ANY OTHER EXPRESS OR IMPLIED WARRANTY. No rights extended under this warranty shall be assigned to any other person, whether by operation of law or otherwise, without our prior written approval.

IMPORTANT!
If you have a claim under the provision of the warranty, contact Barmesa Pumps or your authorized Barmesa Pumps Distributor:
warranty@barmesapumps.com
www.barmesapumps.com

Barmesa®
Pumps