IGB 200-8

PAGE 1

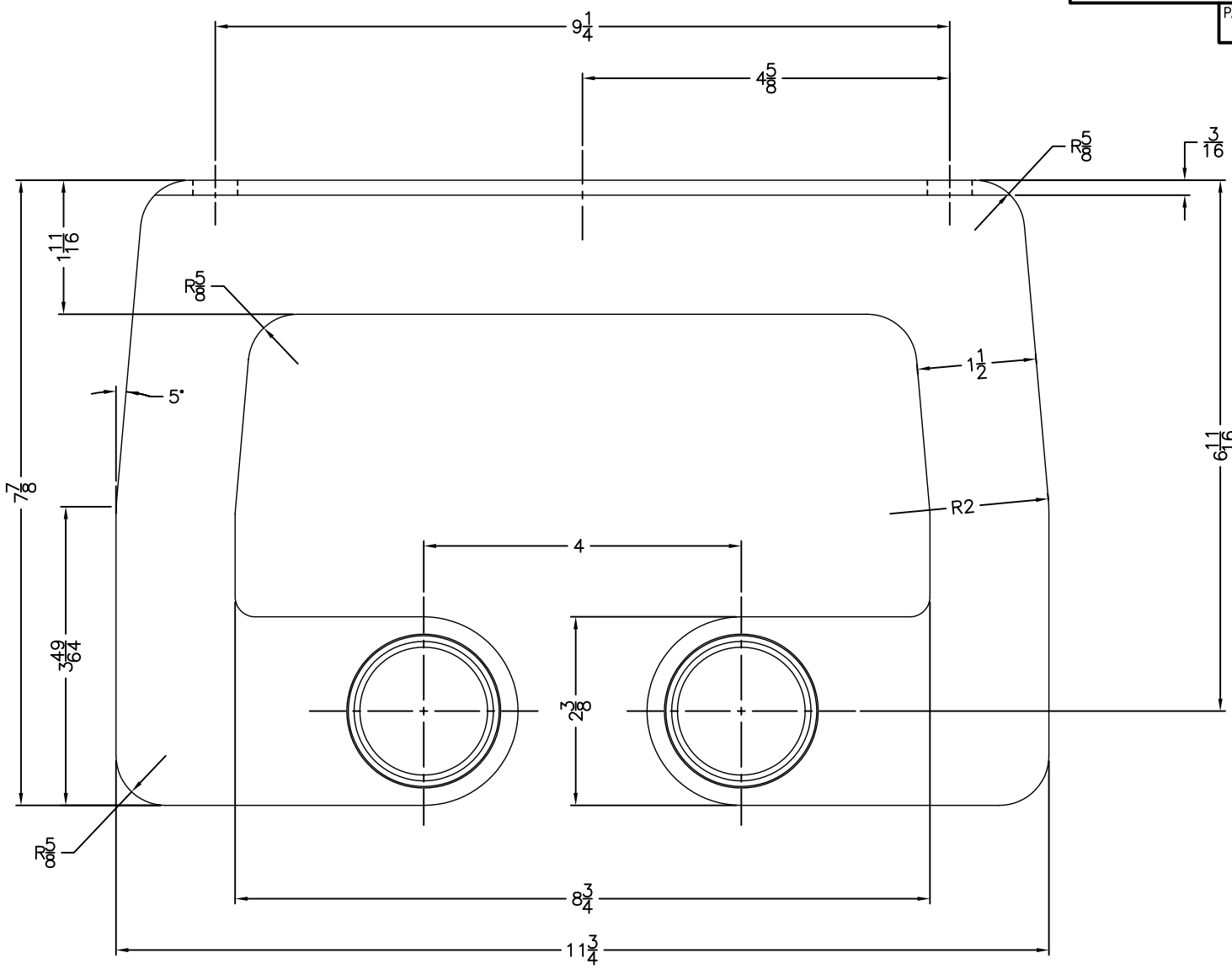

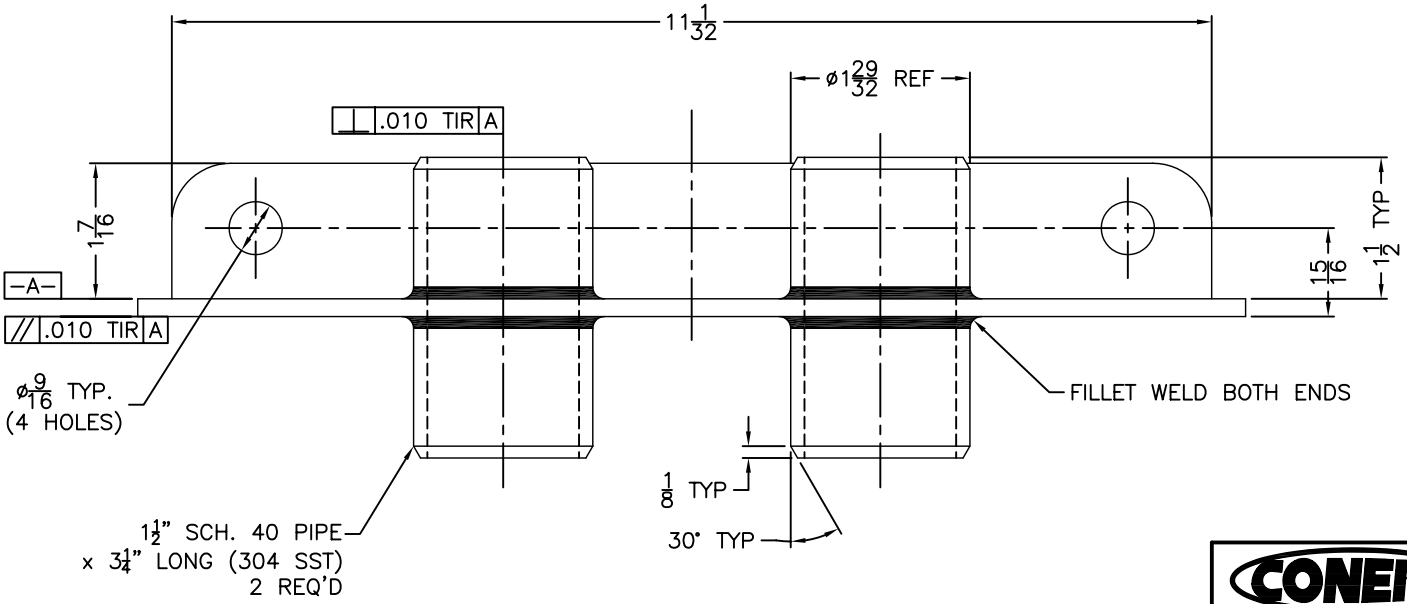

CHANGES	TOLERANCES	DRAWN BY	DATE
F	DECIMALS .XXX = ±.005 .XX = ±.010	D. MIDDLETON	06/21/10
E		MATERIAL SPECIFICATION:	
D	FRACTIONAL X/X = ±.1/64	201 OR 304 SERIES STAINLESS STEEL	
C			
B	ANGLES X° = ±1/2°		
A			

CONERY MFG. INC.

INTERMEDIATE GUIDE BRACKET 2"RAILS, 8" DISCH. PIPE

SCALE: FULL

PART NO. GUIDE BRACKET

ALL INFORMATION CONTAINED IN THIS DRAWING IS CONFIDENTIAL AND PROPRIETARY TO CONERY MANUFACTURING, INC.