SUBMERSIBLE PUMPS

STS SERIES

MENU

8-INCH - 550 GPM

FEATURES

- Premium ductile iron casting for longer life and higher pressures
- Longer discharge and motor bracket bearings for increased pump life
- Investment cast stainless steel impellers for maximum abrasion resistance
- Spiral cutlass rubber intermediate bearings designed for abrasive environments
- 416 stainless steel pump shaft ground and polished for maximum durability
- Custom pumps available

SPECIFICATIONS

- 8" minimum well I.D.
- 10' minimum submergence above inlet
- 4" or 6" NPT discharge
- 150 PPM maximum allowable amount of sand

MODEL NO. EXPLANATION

Example: 350STS10D8C-0264

- 350 = GPM
- STS = Sub Turbine
- 10 = Horsepower
- D = Ductile Iron
- 8 = 8" Pump
- C = Impeller Trim Configuration
- 02 = Number of Stages
- 6 = 6" Motor Bracket
- 4 = 4" Discharge

8-INCH - 550 GPM

PERFORMANCE

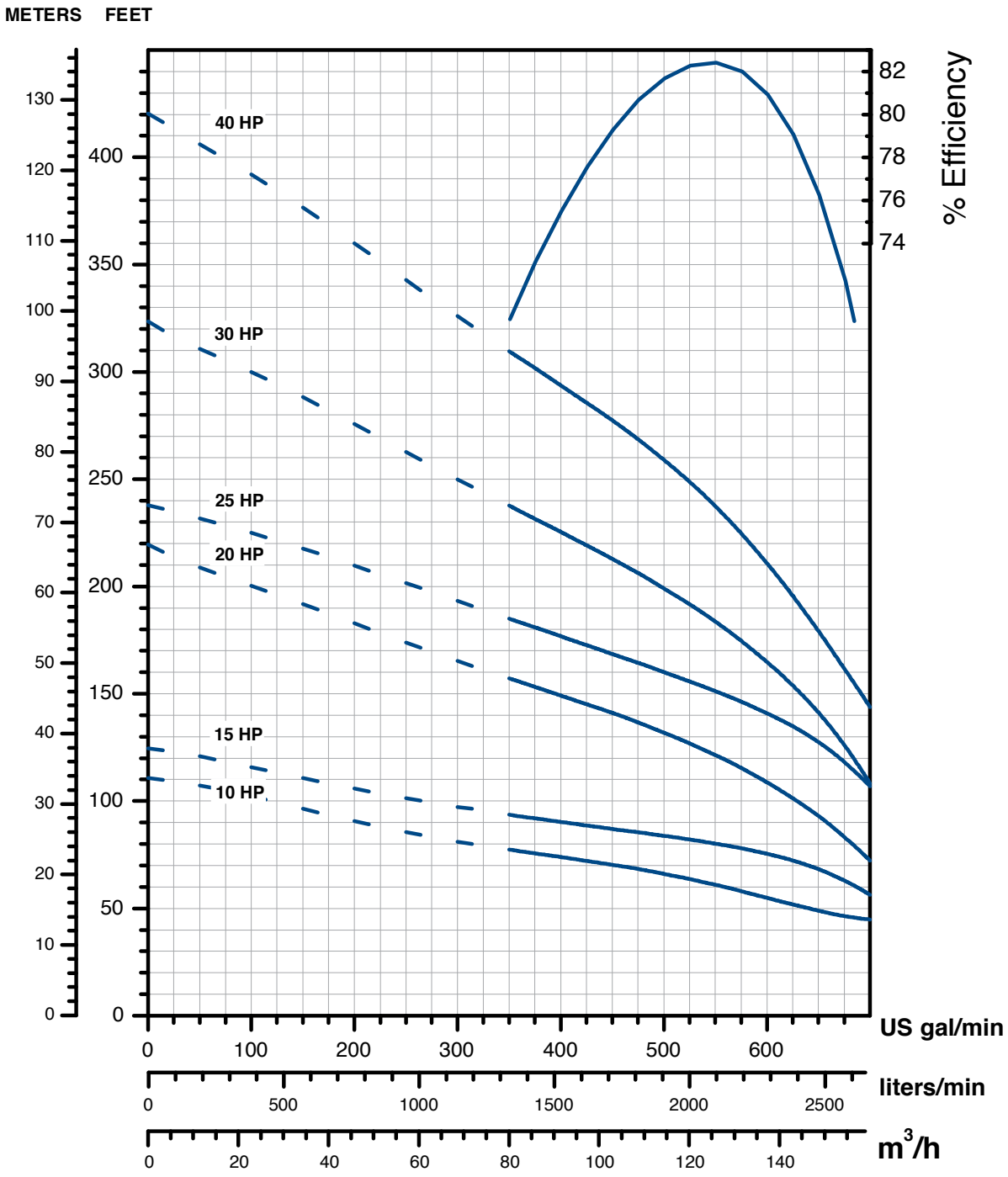

RECOMMENDED OPERATING RANGE

NOTE: Performance based on 68 °F fresh water; 6" motor at 3450 rpm

8-INCH - 550 GPM

PERFORMANCE

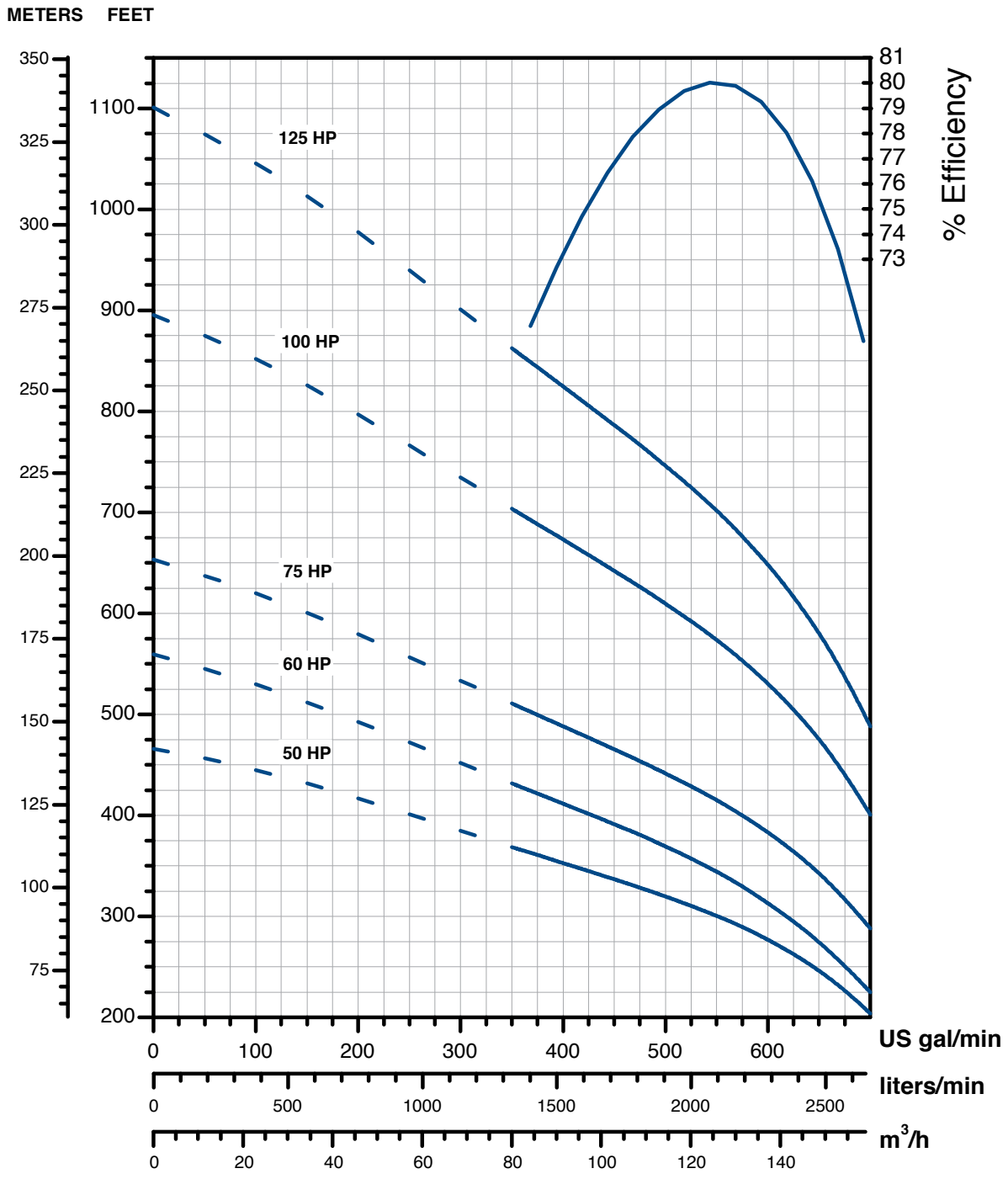

RECOMMENDED OPERATING RANGE

NOTE: Performance based on 68 °F fresh water; 6" motor at 3450 rpm

8-INCH - 550 GPM

PERFORMANCE — SINGLE-STAGE

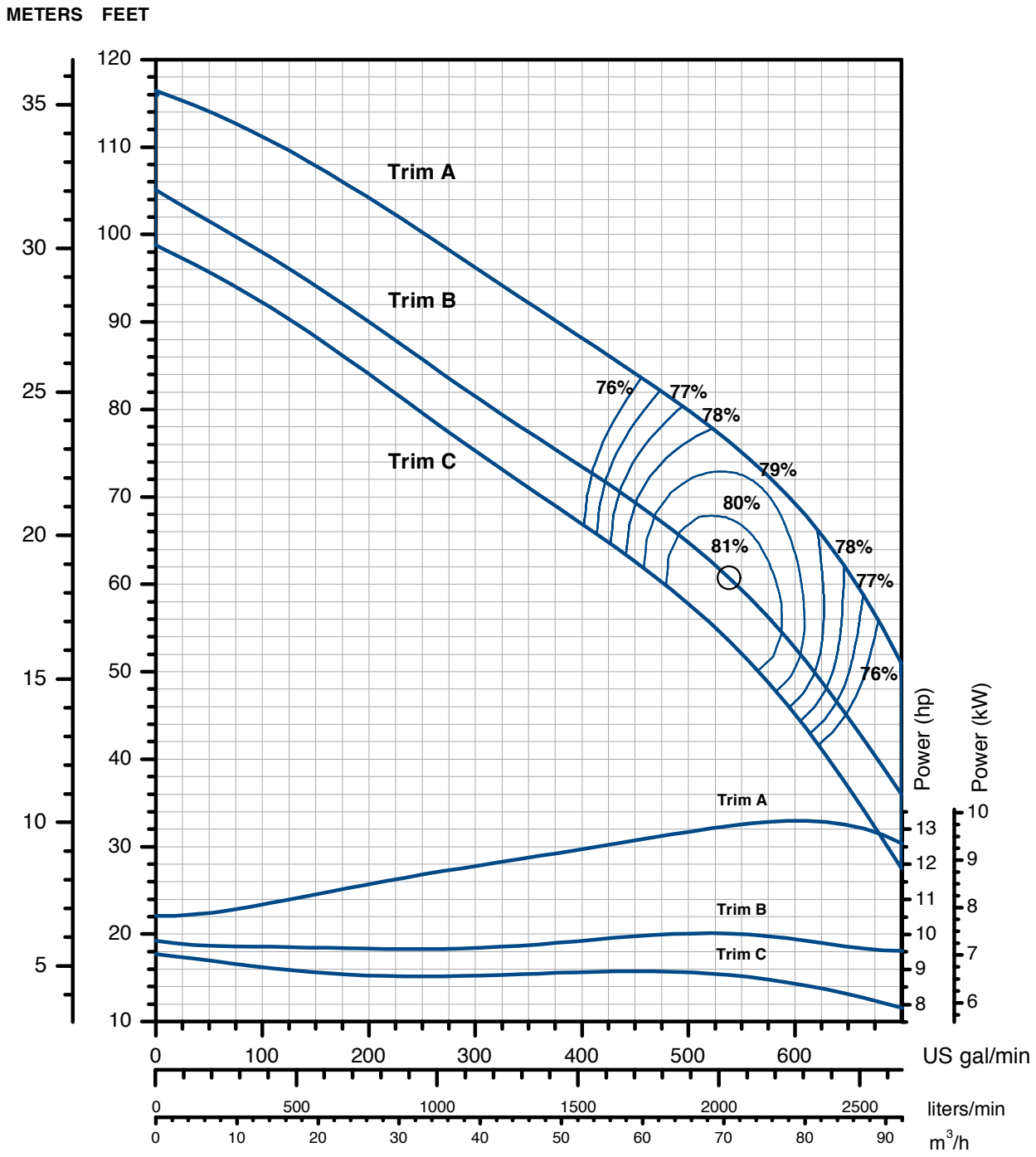

NOTE: Efficiencies are typical and not guaranteed. Efficiency correction required for low stage count pumps. (1-stage 5%, 2-stage 3%, 3-stage 1%)
Bowl #13 begins transition to double-bolted (8 bolts @ bottom, 16 bolts @ top). Nominal RPM: 3450

8-INCH - 550 GPM

ORDERING INFORMATION

Pump Ends								
GPM	HP	Stages	Trim Size	Motor Bracket Size	Discharge Size	Order No.	Model No.	Ship Wt. (lbs)
550	10	1	1B	6″	4″ NPT	97080550001	550STS10D8B-0164	111
	10	1	1B	6″	6″ NPT	97080550101	550STS10D8B-0166	111
	15	1	1A	6″	4″ NPT	97080550201	550STS15D8A-0164	111
	15	1	1A	6″	6″ NPT	97080550301	550STS15D8A-0166	111
	20	2	2B	6″	4″ NPT	97080550002	550STS20D8B-0264	143
	20	2	2B	6″	6″ NPT	97080550102	550STS20D8B-0266	143
	25	2	2A	6″	4″ NPT	97080550202	550STS25D8A-0264	143
	25	2	2A	6″	6″ NPT	97080550302	550STS25D8A-0266	143
	30	3	3B	6″	4″ NPT	97080550003	550STS30D8B-0364	176
	30	3	3B	6″	6″ NPT	97080550103	550STS30D8B-0366	176
	40	4	4B	6″	4″ NPT	97080550004	550STS40D8B-0464	209
	40	4	4B	6″	6″ NPT	97080550104	550STS40D8B-0466	209
	40	4	4B	8″	4″ NPT	97080550604	550STS40D8B-0484	233
	40	4	4B	8″	6″ NPT	97080550704	550STS40D8B-0486	233
	50	4	4A	6″	4″ NPT	97080550204	550STS50D8A-0464	209
	50	4	4A	6″	6″ NPT	97080550304	550STS50D8A-0466	209
	50	4	4A	8″	4″ NPT	97080550804	550STS50D8A-0484	233
	50	4	4A	8″	6″ NPT	97080550904	550STS50D8A-0486	233
	60	5	3A 2B	6″	4″ NPT	97080550005	550STS60D8X-0564	243
	60	5	3A 2B	6″	6″ NPT	97080550105	550STS60D8X-0566	243
	60	5	3A 2B	8″	4″ NPT	97080550805	550STS60D8X-0584	268
	60	5	3A 2B	8″	6″ NPT	97080550905	550STS60D8X-0586	268
	75	6	4A 2B	8″	4″ NPT	97080550806	550STS75D8X-0684	301
	75	6	4A 2B	8″	6″ NPT	97080550906	550STS75D8X-0686	301
	100	8	6A 2B	8″	4″ NPT	97080550808	550STS100D8X-0884	408
	100	8	6A 2B	8″	6″ NPT	97080550908	550STS100D8X-0886	408
	125	10	7A 3B	8″	4″ NPT	97080550810	550STS125D8X-1084	480
	125	10	7A 3B	8″	6″ NPT	97080550910	550STS125D8X-1086	480

SUBMERSIBLE PUMPS

STS SERIES

MENU

8-INCH - 550 GPM

DIMENSIONS

HP	Stages	Trim	Motor Size	P	M*	MD*	Motor Wt.	Pump Wt.
				in	in	in	lbs	lbs
10	1	1B	6"	25.4	25.4	5.44	103	95
15	1	1A	6"	25.4	28.0	5.44	114	95
20	2	2B	6"	32.5	30.6	5.44	126	125
25	2	2A	6"	32.5	33.1	5.44	140	125
30	3	3B	6"	39.6	35.7	5.44	154	155
40	4	4B	6"	46.7	40.8	5.44	182	185
40	4	4B	8"	48.1	36.4	7.70	274	209
50	4	4A	6"	46.7	55.3	5.44	263	185
50	4	4A	8"	48.1	39.4	7.70	309	209
60	5	3A 2B	6"	53.8	61.3	5.44	291	215
60	5	3A 2B	8"	55.1	42.1	7.70	344	240
75	6	4A 2B	8"	62.2	47.4	7.70	399	270
100	8	6A 2B	8"	76.4	54.9	7.70	481	331
125	10	7A 3B	8"	90.6	68.8	7.70	644	391

*NOTE: *MD diameter = Franklin Electric Motor, M = Maximum Length of Franklin Electric Motor*

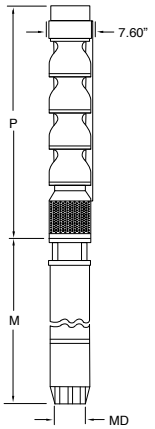

DIMENSIONS IMPELLER

Trim	A Diameter	C Angle
A	5.674"	17 °
B	5.371"	17 °
C	5.227"	17 °

MATERIALS

Part Name	Common Material Name	Material Spec. Number
Discharge Bracket	Ductile Iron	ASTM A536 65-45-12
Top Bowl	Ductile Iron	ASTM A536 65-45-12
Intermediate Bowl	Ductile Iron	ASTM A536 65-45-12
Bearings, Discharge & Suction	Bronze	ASTM 8584 C89835
Impeller	304 Stainless Steel	ASTM A743/A743M CF8
Pump Shaft	416 Stainless Steel	ASTM A582 S41600
Suction Bracket	Ductile Iron	ASTM A536 65-45-12
Bowl Bearing	Rubber	Rubber
Sand Collar	300 Stainless Steel	ASTM A666
Suction Screen	302 Stainless Steel	ASTM A240 S30200
Cable Guard	300 Stainless Steel	ASTM A666
Shaft Coupling	416 Stainless Steel	ASTM A582 S41600
Upthrust Bolt	300 Stainless Steel	ASTM A666
Taper Lock	416 Stainless Steel	ASTM A582 S41600
Bolting	300 Stainless Steel	ASTM A666

NOTE: Bowl bearing and shaft options available; contact customer service for available options

8-INCH - 550 GPM

REPAIR PARTS

Item No.	Part Description	Part No.	Qty. Per
1, 2	Upthrust Bolt/Nut Kit	305471553	1
3	Discharge 4" NPT (No Top Bearing) (225-700)	305471976	1
	Discharge 6" NPT (No Top Bearing) (225-700)	305471977	
4	Top Bearing - Bronze (Included in 5)	305471990	As Req.
5	Top Bowl with Bronze Bearing	305471995	As Req.
	Top Bowl with Bronze Bearing XP	305471996	
6	Bowl Bolt Kit (8 pcs.)*	305471549	As Req.
	Bowl Bolt Kit (500 pcs.)	305471551	
7	8" Bowl Bearing - Rubber (Included in 8)	305471400	As Req.
	8" Bowl Bearing - Viton (Included in 8)	305471401	
	8" Bowl Bearing - Bronze (Included in 8)	305471379	
8	Bowl and Bearing Assembly - Bronze	305471540	As Req.
	Bowl and Bearing Assembly XP - Bronze	305471543	
	Bowl and Bearing Assembly - Rubber	305471539	
	Bowl and Bearing Assembly XP - Rubber	305471542	
	Bowl and Bearing Assembly - Viton	305471541	
	Bowl and Bearing Assembly XP - Viton	305471544	
9	Taper Lock Collet Kit (Included in 10)	305471371	As Req.
12	Sand Cap w/ Set Screws	305471373	1
13	Motor Bracket Bearing - Bronze (Included in 14)	305471379	1
14	6" Motor Bracket with Bronze Bearing	305471439	As Req.
	8" Motor Bracket with Bronze Bearing	305471436	
15	Suction Screen with Screws for 6" Motor Bracket	305471375	1
	Suction Screen with Screws for 8" Motor Bracket	305471376	
18	Cable Guard Screw Kit	305471000	1
19	8" x 6" Motor Coupling	305471403	1
	8" x 8" Motor Coupling	305471404	
-	6" Motor Bolt Kit	305352901	1
	8" Motor Bolt Kit	305352902	
-	Nameplate with Drive Screws	305418901	1
-	Owner's Manual	106089101	1

** Pumps of 13 stages or more require double bolting; two bolt kits per stage will be required for the 13th stage and above*

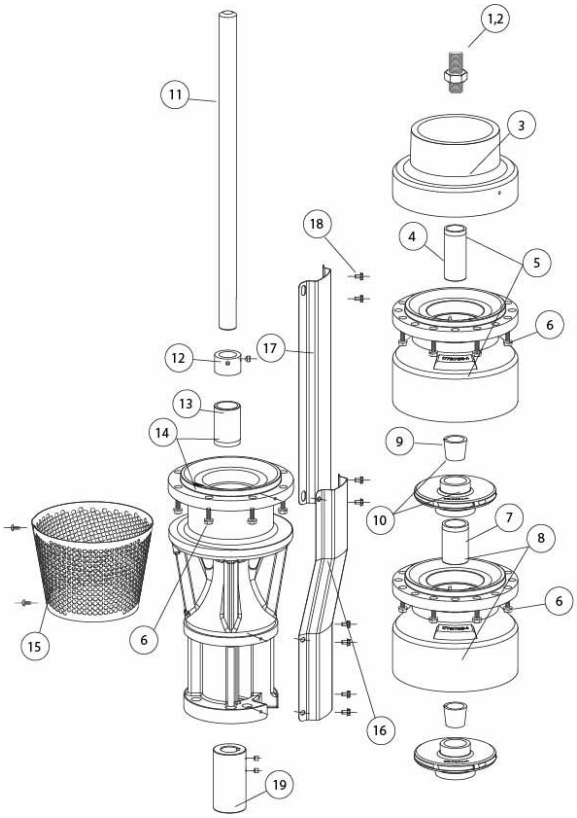

REPAIR PARTS — IMPELLER

Item No.	Description	Diameter (in)	Angle	Kit w/ Collet
10	A Trim	5.674	17 °	305471590
	B Trim	5.371	17 °	305471591
	C Trim	5.227	17 °	305471592

NOTE: Shaft and cable guard information located on the following pages

8-INCH - 550 GPM

REPAIR PARTS

8" x 6" Shaft 8" Pump with 6" Motor Bracket				
Item No.	Stages	Length (in)	Shaft Part No.	
			416 SS	Chrome Hardened
11	1	19.46	305472066	305472165
	2	26.55	305472068	305472167
	3	33.63	305472070	305472169
	4	40.72	305472072	305472171
	5	47.81	305472074	305472173
	6	54.90	305472076	305472175
	7	61.98	305472078	305472177

REPAIR PARTS

8" x 6" Cable Guard (Pre-Cut) 8" Pump with 6" Motor Bracket				
Item No.	Stages	Length (in)	Cable Guard Part No.	
			Bracket	Pump
16, 17	1	9.44	305471001	305471792
	2	16.58	305471001	305471795
	3	23.67	305471001	305471798
	4	30.76	305471001	305471802
	5	37.85	305471001	305471805
	6	44.93	305471001	305471849
	7	52.02	305471001	305471853

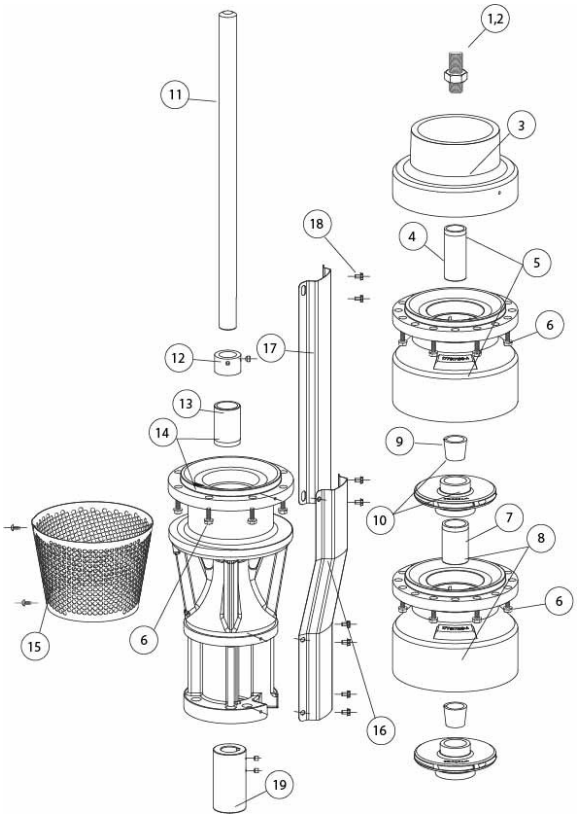

8-INCH - 550 GPM

REPAIR PARTS

8" x 8" Shaft 8" Pump with 8" Motor Bracket				
Item No.	Stages	Length (in)	Part No.	
			416 SS	Chrome
11	1	19.96	305472067	305472166
	2	27.05	305472069	305472168
	3	34.14	305472071	305472170
	4	41.22	305472073	305472172
	5	48.31	305472075	305472174
	6	55.40	305472077	305472176
	7	62.48	305472079	305472178
	8	69.57	305472080	305472179
	9	76.66	305472081	305472180
	10	83.75	305472082	305472181
	11	90.83	305472083	305472182
	12	97.92	305472084	305472183
	13	105.01	305472085	305472184
	14	112.09	305472086	305472185

8" x 8" Cable Guard (Pre-cut) 8" Pump with 8" Motor Bracket			
Item No.	Stages	Length	Part No.
17	1	23.94	305471866
	2	31.03	305471869
	3	38.11	305471829
	4	45.20	305471833
	5	52.29	305471836
	6	59.37	305471807
	7	66.46	305471810
	8	73.55	305471813
	9	80.63	305471816
	10	87.72	305471819
	11	94.81	305471821
	12	101.89	305471822
	13	108.89	305471823
	14	116.07	305471824

8" Cable Guard			
Item No.	Description	Length (in.)	Part No.
17	Cable Guard (10' Section)	120	305471789
16	Cable Guard 6" Motor Bracket Section*	14.125	305471001

** Must have for 6" Motor Bracket*
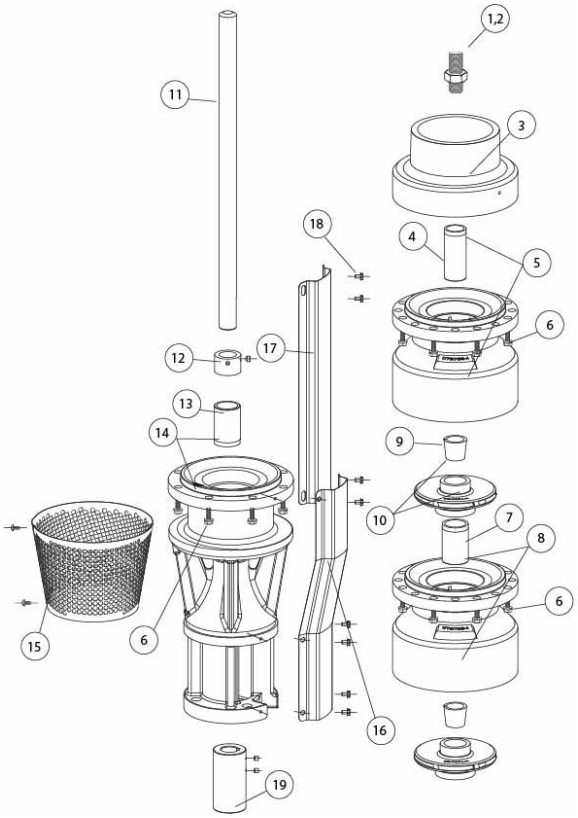
8" 416 SS Shaft (Double Keyed)	
Part No.	Length (ft.)
305471367	4
305471368	6
305471369	8
305471370	10