Dimensional Data – H4H/H4HX

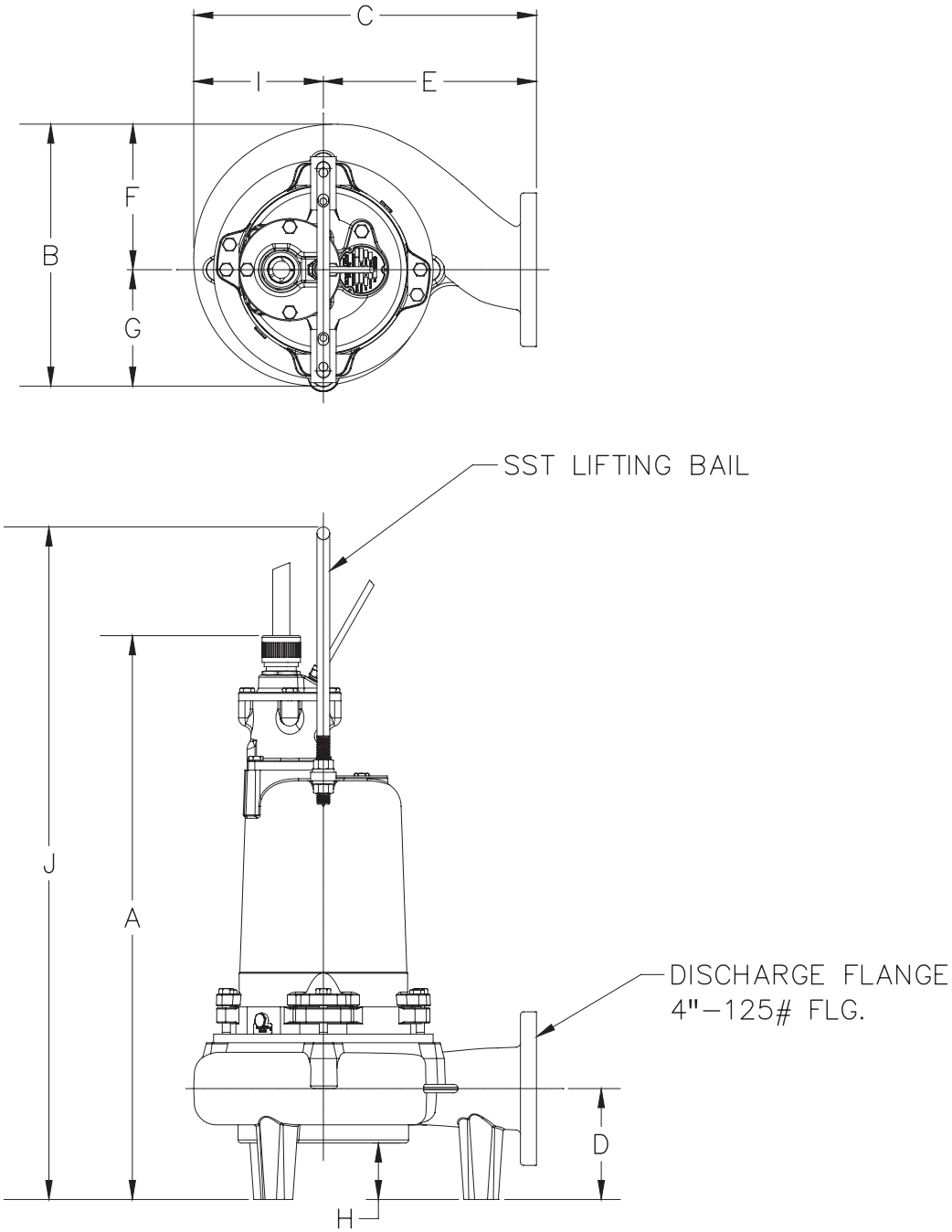

	A	B	C	D	E	F	G	H	I	J
H4H	33	15-5/8	20-3/16	6-1/2	12-1/2	8-13/16	7-11/16	3-3/16	8-1/4	39-7/16
H4HX	39-1/4	15-5/8	20-3/16	6-1/2	12-1/2	8-13/16	7-11/16	3-3/16	8-1/4	50-7/8

ALL DIMENSIONS IN INCHES
NOTE: CASTING DIMENSIONS MAY VARY ± 1/8"