LSR-XXX SERIES

Load Sensor

Description

The LSR-xxx Series load sensors use current levels to determine feed rates, tool wear, loss of prime on pumps, mixer viscosity and all types of overload and underload conditions. They may also be used to stage pump motors, chillers and other machinery. These devices combine a current transformer (CT) with Form C (SPDT) relay contacts to switch alarm circuits, contactors or any resistive or inductive load. One simple screwdriver adjustment will calibrate the sensor for all single-phase or 3-phase applications up to 100hp.

Features

- Can monitor current of motors up to 100Hp
- Fine adjustment with 20-turn pot
- Status LEDs

Wiring Diagram

TYPICAL WIRING DIAGRAM FOR LOAD LOSS DETECTION

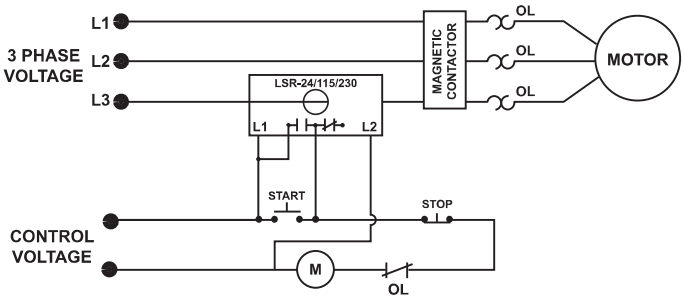

TYPICAL WIRING DIAGRAM FOR OVERLOAD DETECTION

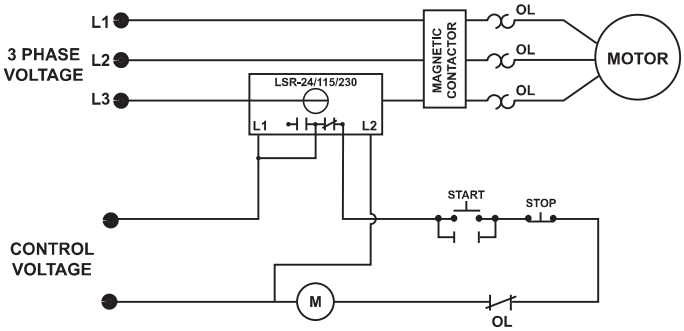

For dimensional drawing see: Appendix, page 511, Figure 14.

Ordering Information

MODEL	LINE VOTAGE
LSR-24	24VAC
LSR-115	115VAC
LSR-230	230VAC

Specifications

Functional Characteristics	
Isolation	600VAC rms
Current Adjustment Range (Typical)	2-100A
Current Adjustment Range (Min-Max)	0.5-135A
Trip Setpoint	Adjustable to ±1% range
Input Characteristics	
Control Power:	
LSR-24	24VAC
LSR-115	115VAC
LSR-230	230VAC
Max Current Ratings	135A max. continuous
Output Characteristics	
Output Contact Rating (SPDT):	
Pilot Duty	480VA @ 240VAC
General Purpose	10A
General Characteristics	
Temperature Range	-20° to 70°C (-4° to 158°F)
Wire Size	#12-24AWG
Hole Size	0.725" diameter
Terminal Torque	7 in.-lbs.
Safety Marks	
CSA, CSA-NRTL/C	(File #46510)
CE	IEC 60947
Dimensions	**H** 42.42 mm (1.67"); **W** 58.42 mm (2.3"); **D** 90.43 mm (3.56")
Weight	0.4 lb. (6.4 oz., 181.44 g)
Mounting Method	Four #6 screws 3/4" in length

Caution: This product should not be relied upon solely for safety of life or safety applications.