MYERS® CT Series
General Purpose Centrifugal Pumps

The CT Series have a rugged cast iron construction and can be coupled with either a corrosion resistant Noryl, or a lead-free brass impeller.

APPLICATIONS

- **Water systems and sprinkling...** for homes, farms and industry.

SPECIFICATIONS

Body and Seal Plate – Close-grained cast iron

Base – Steel 10 gauge

Impeller Types – Noryl® and brass

Shaft – 416 stainless steel

Mechanical Seal – Carbon/ceramic, Buna-N

FEATURES

- **1/2 through 2-1/2 HP** – High head models, with heavy-duty motors, easy service design and four-position discharge.
- **Drain Port** – Provided for easy winterizing.
- **High Head** – Up to 140' of head with capacities to 90 GPM.
- **Easy Serviceability** – All models include replaceable wear ring and feature back pull-out design.
- **Noryl® Impellers** – Abrasion-resistant for normal applications with working temperatures to 140°F.
- **Silicon Bronze Impellers** – Pumps equipped with shaft seals rated for temperatures to 225°F.

ORDERING INFORMATION

Catalog Number	HP	Suction	Discharge	Impeller Material	Phase
CTJ05	1/2	1-1/4"	1"	Composite	1
CTJ053		1-1/4"	1"	Composite	3
CTJ05B		1-1/4"	1"	Brass	1
CTJ05B3		1-1/4"	1"	Brass	3
CTJ07	3/4	1-1/4"	1"	Composite	1
CTJ073		1-1/4"	1"	Composite	3
CTJ07B		1-1/4"	1"	Brass	1
CTJ07B3		1-1/4"	1"	Brass	3
CTJ10	1	1-1/4"	1"	Composite	1
CTJ103		1-1/4"	1"	Composite	3
CTJ10B		1-1/4"	1"	Brass	1
CTJ10B3		1-1/4"	1"	Brass	3
CTJ15	1-1/2	1-1/4"	1"	Composite	1
CTJ153		1-1/4"	1"	Composite	3
CTJ15B		1-1/4"	1"	Brass	1
CTJ15B3		1-1/4"	1"	Brass	3
CTJ20	2	1-1/2"	1-1/2"	Composite	1
CTJ203		1-1/2"	1-1/2"	Composite	3
CTJ20B		1-1/2"	1-1/2"	Brass	1
CTJ20B3		1-1/2"	1-1/2"	Brass	3
CTJ25	2-1/2	2"	1-1/2"	Composite	1
CTJ253		2"	1-1/2"	Composite	3
CTJ25B		2"	1-1/2"	Brass	1
CTJ25B3		2"	1-1/2"	Brass	3

MYERS® CT Series
General Purpose Centrifugal Pumps

PUMP PERFORMANCE (Capacity in Gallons Per Minute)

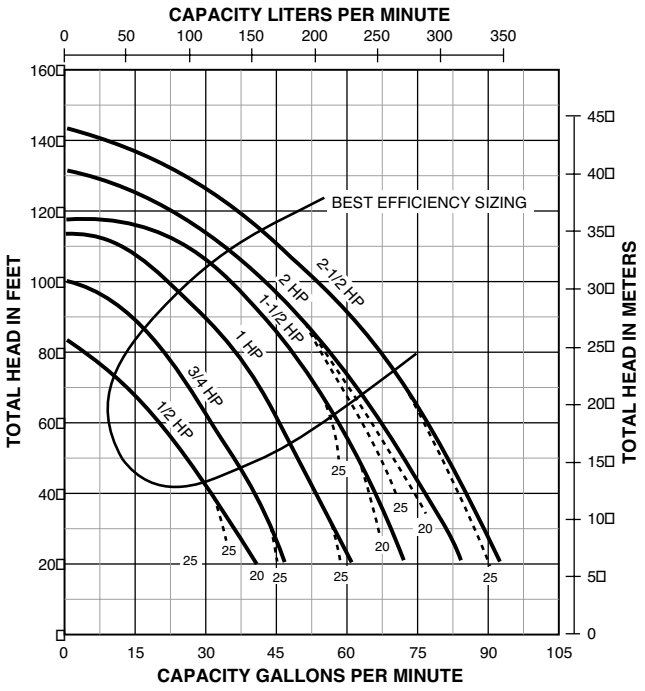

HP	Discharge Pressure		Dynamic Suction Lift				
	PSI	Feet Head	5'	10'	15'	20'	25'
1/2	10	23.1	—	34	32	29	26
	20	46.2	25	21	18	15	11
	30	69.3	10	—	—	—	—
3/4	10	23.1	—	—	42	39	37
	20	46.2	35	32	30	28	26
	30	69.3	24	22	19	15	10
1	20	46.2	48	46	45	43	40
	30	69.3	38	35	31	28	25
	40	92.4	23	20	15	—	—
1-1/2	20	46.2	62	60	58	55	52
	30	69.3	50	48	44	40	37
	40	92.4	37	32	29	22	—
2	30	69.3	60	57	52	59	45
	40	92.4	45	40	36	31	24
	50	115.5	22	15	—	—	—
2-1/2	20	46.2	81	79	76	74	71
	30	69.3	69	67	63	60	56
	40	92.4	56	51	47	44	38
	50	115.5	33	30	22	15	—

Tested and rated in accordance with Water Systems Council Standards.

NOTE: Pumps installed with a Pro-Source® tank require a 100 PSI relief valve. Pumps with a conventional tank require a 75 PSI relief valve. Relief valve must be capable of relieving entire flow of pump at relief pressure.

OUTLINE DIMENSIONS

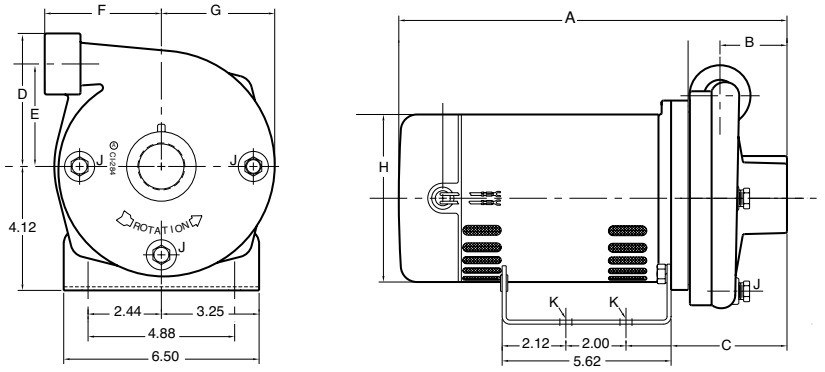

Dimensions (in inches) are for estimating purposes only.

DIMENSIONS (In Inches)

HP	NPT Suct.	NPT Disch.	A (1 Phase)	A (3 Phase)	B	C	D	E	F	G	H	NPT J	K
1/2	1-1/4	1	11-21/32	13-3/8	2-1/16	5-9/16	4-1/2	3-7/16	3-7/8	3-15/16	5-5/8	1/4	3/8 Dia.
3/4	1-1/4	1	11-25/32	13-3/8	2-1/16	5-9/16	4-1/2	3-7/16	3-7/8	3-15/16	5-5/8	1/4	3/8 Dia.
1	1-1/4	1	12-25/32	13-7/8	2-1/16	5-9/16	4-1/2	3-7/16	3-7/8	3-15/16	5-5/8	1/4	3/8 Dia.
1-1/2	1-1/4	1	13-39/64	14-3/8	2-1/16	5-9/16	4-1/2	3-7/16	3-7/8	3-15/16	5-5/8	1/4	3/8 Dia.
2	1-1/2	1-1/4	16-3/4	16-15/16	2-13/16	6-5/16	4-27/32	3-13/32	4-5/8	4	6-7/16	1/4	3/8 Dia.
2-1/2	2	1-1/2	17-3/4	17-1/4	2-13/16	6-5/16	4-27/32	3-13/32	4-5/8	4	6-7/16	1/4	3/8 Dia.

PENTAIR

USA 293 WRIGHT STREET, DELAVAN, WI 53115 WWW.FEMYERS.COM PH: 888-987-8677 ORDERS FAX: 800-426-9446
CANADA 490 PINEBUSH ROAD, UNIT 4, CAMBRIDGE, ONTARIO, N1T 0A5 PH: 800-363-7867 ORDERS FAX: 888-606-5484

Because we are continuously improving our products and services, Pentair reserves the right to change specifications without prior notice.

© 2016 Pentair plc. All Rights Reserved.

M11986WS (12/13/16)