Panel Wiring Diagram
Model A2 RO TS

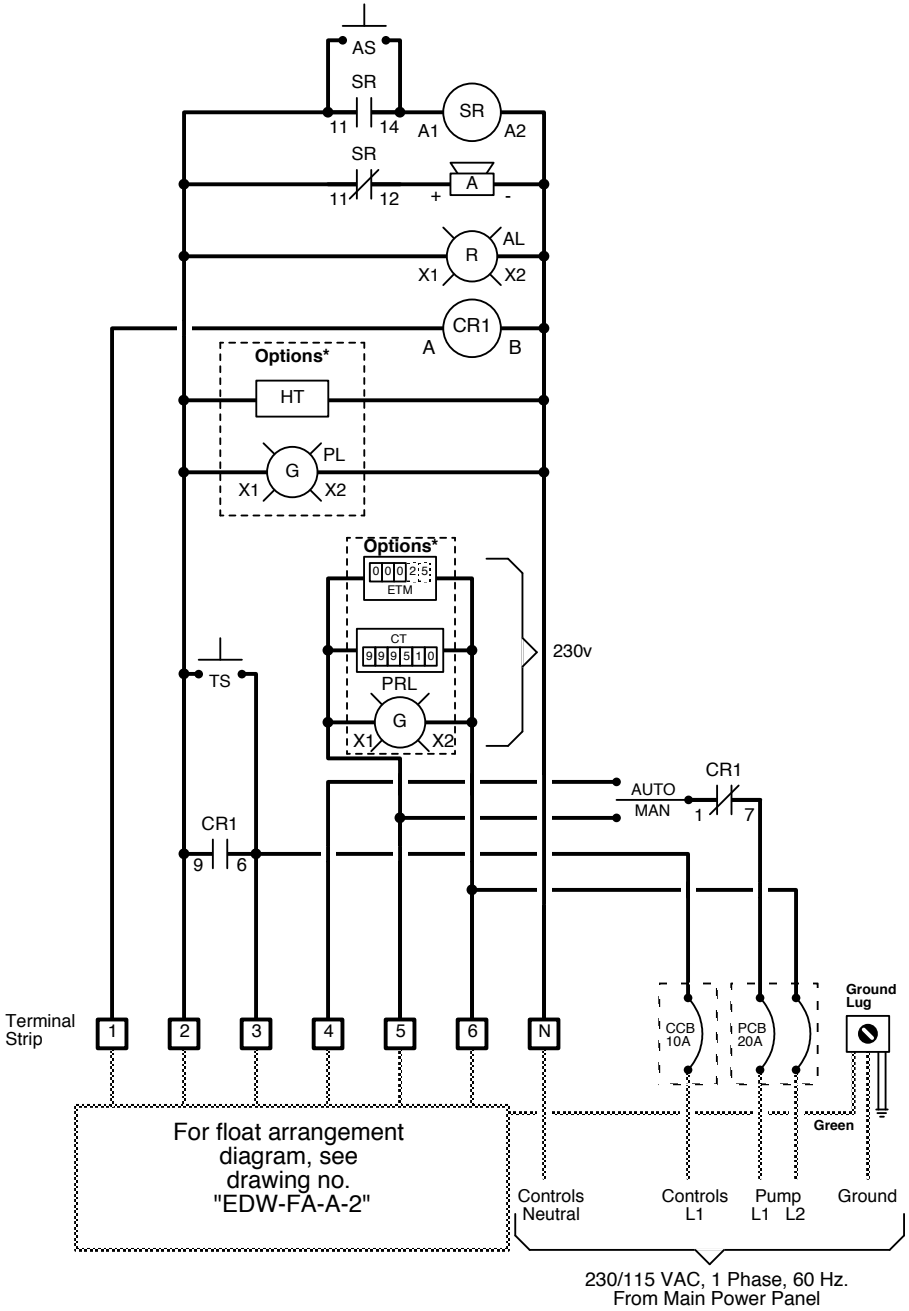

Simplex Operation

High Level Alarm: This float activates the alarm light and audible alarm when lifted. The audible alarm may be silenced by pressing the illuminated PUSH TO SILENCE button on the front of the control panel. The alarm light will remain on until the float is lowered.

Pump On & Off: This float turns on the pump when lifted and off when lowered.

Redundant Off & Low Level Alarm: This float turns off the pump when lowered. This float is a secondary off float which will operate if the Pump On & Off float fails. Pumping will be disabled in both the automatic and manual modes. This float also activates the alarm light and audible alarm. The audible alarm may be silenced by pressing the illuminated PUSH TO SILENCE button on the front of the control panel. The alarm light will remain on until the float is lifted.

Key

= Factory Wire
= Field Wire
= Alternate Field Wire
A = Audio Alarm, 115 VAC
AL = Alarm Light
AS = Audio Silence Switch
CCB = Controls Circuit Breaker
CR1 = Redundant Off Relay
PCB = Pump Circuit Breaker
SR = Silence Control Relay
TS = Alarm Test Switch

***Options**
CT = Cycle Counter
ETM = Elapsed Time Meter
HT = Heater
PL = Power Light
PRL = Pump Run Light

Power Wiring Options

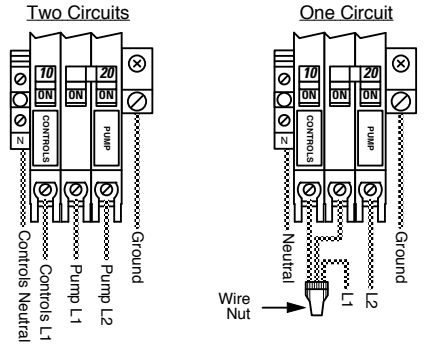

Factory default. Wire as shown.

Use a wire nut to connect the first pole of the pump circuit breaker together with the controls breaker and with the incoming L1 power line.

Orenco Systems®
Incorporated

814 AIRWAY AVENUE
SUTHERLIN, OREGON
97479-9012

TELEPHONE:
(541) 459-4449

FACSIMILE:
(541) 459-2884

EDW-WD-A-12
Rev. 6.0 ©05/1/07