Model: PFSTEP512, PFSTEP522

Features:

General purpose pump for residential, light industrial and commercial sump or effluent applications.

- **DISCHARGE:** 2" NPT, Female, Vertical
- **LIQUID TEMPERATURE:** 104°F Continuous
- **MOTOR HOUSING/ VOLUTE:** Cast Iron, Class 30
- **SEAL PLATE:** Cast Iron, Class 30
- **IMPELLER:** Single vane enclosed, Polypropylene with stainless steel insert
- **SHAFT & HARDWARE:** Stainless steel
- **PAINT:** Air dry enamel
- **SQUARE RINGS:** Buna-N
- **SEAL:** Outboard, Single mechanical, .625", Type "C", U.S. Seal, Oil Filled Chamber, Carbon/Ceramic/Buna-N
- **UPPER BEARING:** Single row, ball, oil lubricated
- **LOWER BEARING:** Single row, ball, oil lubricated
- **POWER CORD:** 20 FT., Cord with plug, Fast Disconnect Design
  115 VOLT: SJTOW, 14/3 Cord with plug, .39" Dia.
  230 VOLT: SOW, 14/3 Cord with plug, .53" Dia.
- **MOTOR:** Class B Insulation, Oil Filled
- **SINGLE PHASE:** Permanent Split Capacitor (PSC), Includes overload protection in motor
- **WARRANTY:** 2 year

Effluent Pump
2" NPT Discharge,
3/4" Spherical Solids
Manual Operation

HP	HP	Volt/ PH	Hz	RPM (Nom)	NEMA Start Code	Full Load Amps	Locked Rotor Amps	Cord Size	Cord Type	Cord O.D. inch	Simplex Control ‡	Duplex Control ‡
PFSTEP512	.50	115/1	60	3450	G	14.0	24.7	14/3	SJTOW	.39	PF1000	PF2000
PFSTEP522	.50	230/1	60	3450	E	7.0	10.2	14/3	SOW	.53	PF1003	PF2003

Remove Plug for use with Control Panel
‡ Economy Control Panels: PF100, PF200, PF103, PF203

2 Year Warranty

877-24PUMPS • fax: 516-812-6897 • www.powerflopumps.com

POWER-FLO® Pumps & Systems

Model: PFSTEP512, PFSTEP522

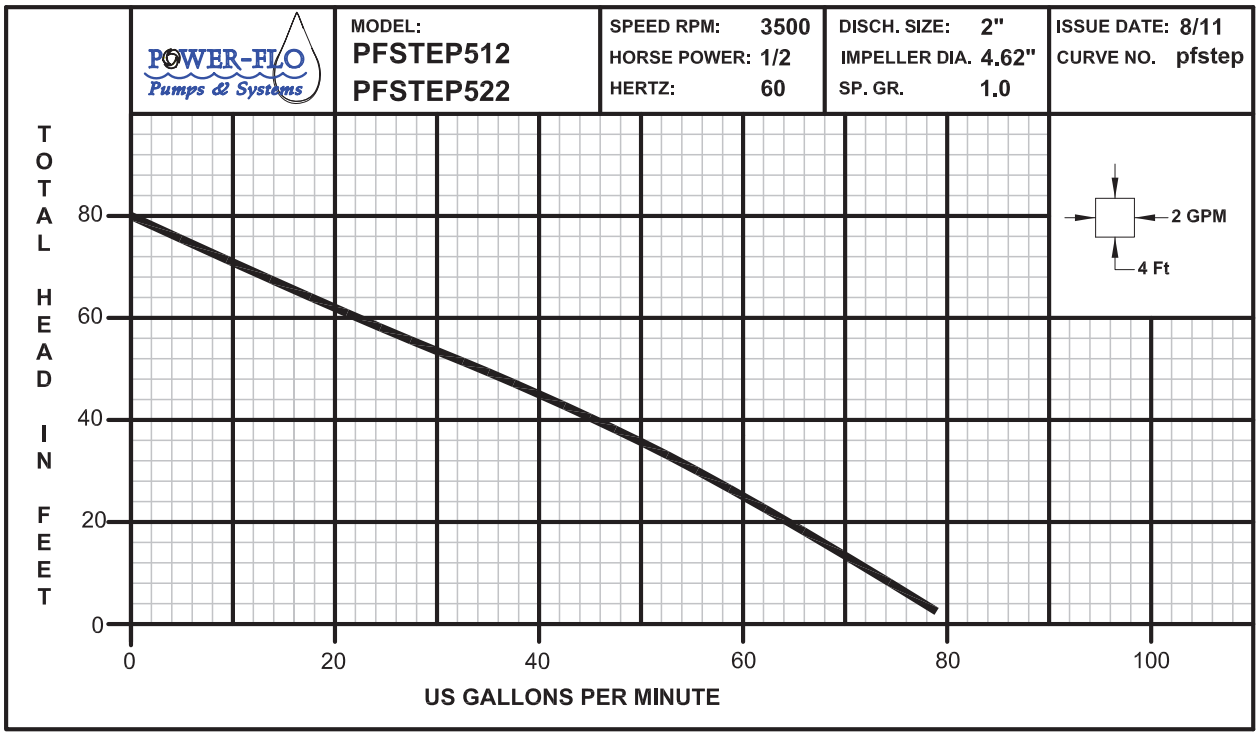

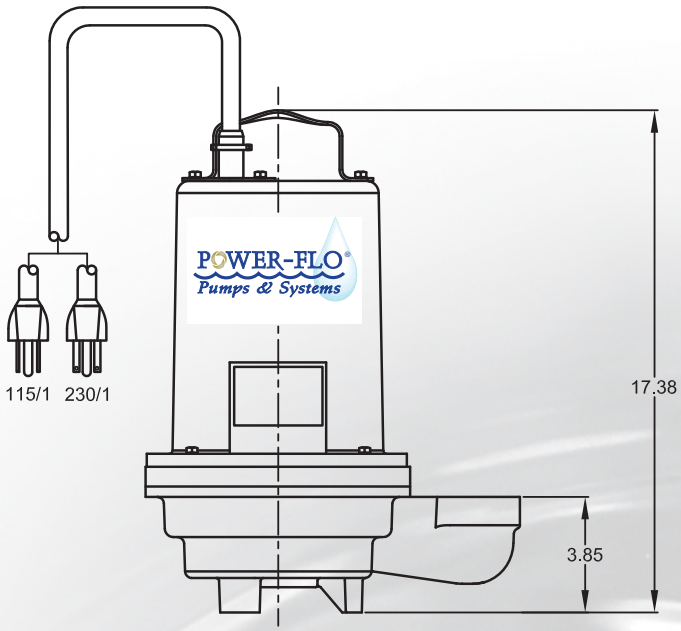

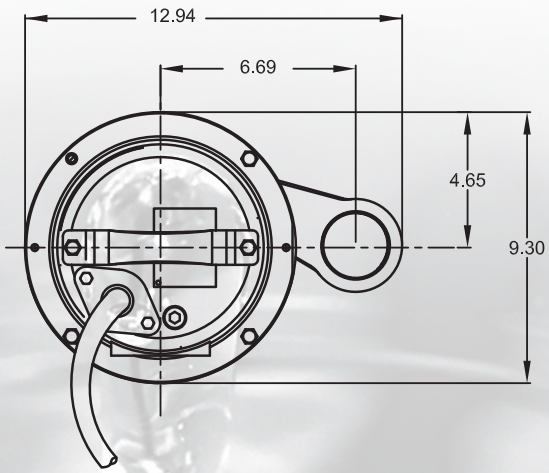

NOTE:
Remove plug for use with control panel

POWER-FLO Pumps & Systems
877-24PUMPS • fax: 516-812-6897 • www.powerflopumps.com