Your Peace of Mind is Our Top Priority®

Product information presented here reflects conditions at time of publication. Consult factory regarding discrepancies or inconsistencies.

ZOELLER® PUMP COMPANY

Zoeller Family of Water Solutions™

SECTION: 2.30.080
FM2855
0615
Supersedes
0914

TECHNICAL DATA SHEET
EXPLOSION PROOF SERIES
THE SHARK Series® *Model X840/X841/X842 Grinder Pumps*
Class I, Division 1, Group C & D Rated

PRODUCT SPECIFICATIONS

MOTOR	Horse Power	2
	Voltage	200 - 575
	Phase	1 or 3 Ph
	Hertz	60 Hz
	RPM	3450
	Type	Capacitor start / capacitor run or 3 Ph
	Insulation	Class F
	Amps	4.5 - 20.0
PUMP	Operation	Nonautomatic
	Discharge Size	1¼" NPT vertical
	Cord Length	20' (6 m) standard
	Cord Type	UL listed, SOOW
	Max. Head	125' (38.1 m)
	Max. Flow Rate	59 GPM (223 LPM)
	Max. Operating Temp.	104° F (40° C)
	Cooling	Oil filled
	Motor Protection	Auto reset thermal overload (1 Ph) or thermal sensor (3 Ph)
MATERIALS	Cap	Cast iron
	Motor Housing	Cast iron
	Adapter	Cast iron
	Pump Housing	Cast iron
	Upper Bearing	Ball bearing
	Lower Bearing	Ball bearing
	Mechanical Seals	Carbon/ceramic with stainless steel parts
	Impeller Type	Non-clogging vortex
	Impeller	Ductile iron or bronze
	Hardware	Stainless steel
	Motor Shaft	Stainless steel
	Square Rings	Neoprene
	Cutter	Hardened stainless steel, Rockwell C55-60

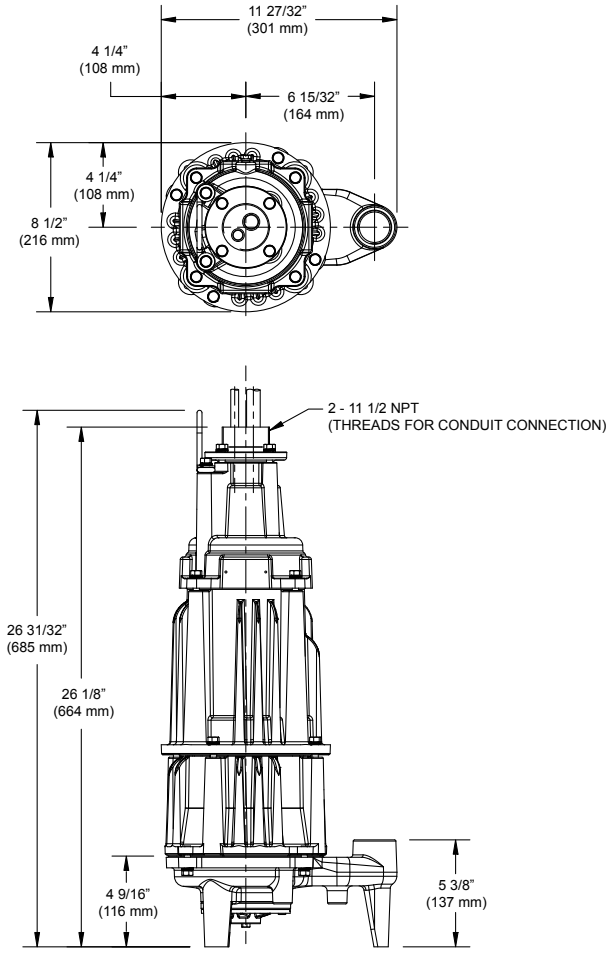

NOTE: See model comparison chart for specific details.

Tested to CSA Standard C22.2 No. 145

FM APPROVED Standard 3600 & 3615

POWDER COATED TOUGH™

Submersible Wastewater Pump Association SWPA MEMBER

⚠ WARNING NOT FOR USE IN ACIDIC ATMOSPHERES.

© Copyright 2015 Zoeller® Co. All rights reserved.
502-778-2731 | 800-928-7867 | 3649 Cane Run Road | Louisville, KY 40211-1961 | www.zoeller.com

TOTAL DYNAMIC HEAD FLOW PER MINUTE

MODEL		X840		X841		X842	
Feet	Meters	Gal.	Liters	Gal.	Liters	Gal.	Liters
5	1.5	45	170	59	223	34	129
10	3.0	45	170	59	223	34	129
20	6.1	45	170	59	223	34	129
30	9.1	44	167	59	223	34	129
40	12.2	42	159	59	223	34	129
50	15.2	36	136	59	223	34	129
60	18.3	30	114	57	216	34	129
70	21.3	23	87	48	182	32	121
80	24.4	16	61	39.5	150	29	110
90	27.4	10	38	31	117	25	95
100	30.5	3	11	22	83	20	76
110	33.5	--	--	13	49	13	49
120	36.6	--	--	4.5	17	4	15
Shut-off Head:		104 ft (31.7 m)		125 ft (38.1 m)		125 ft (38.1 m)	

016532

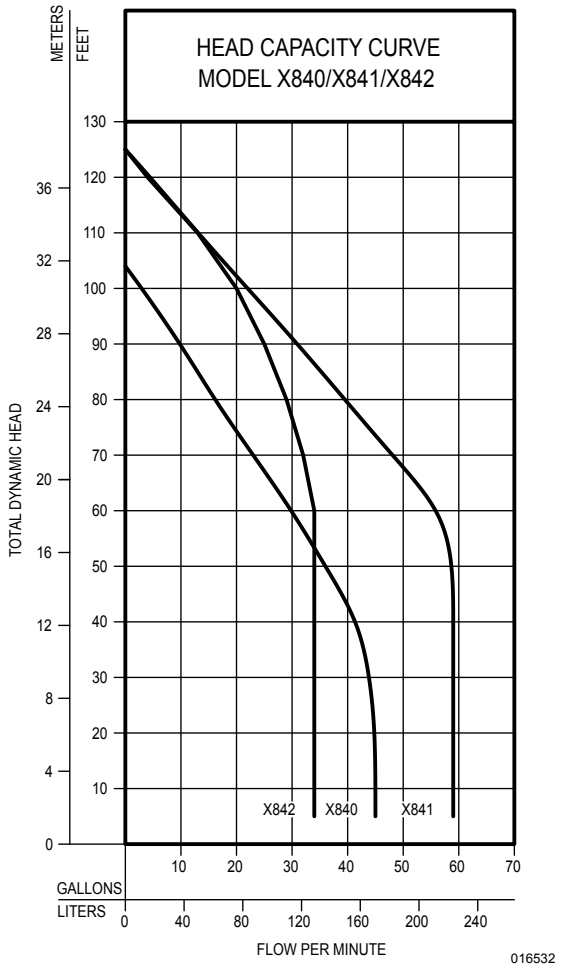

Model	MODEL COMPARISON							
	Mode	Volts	Phase	Amps	HP	Hz	Lbs	Kg
IX840	Non	200	1	20.0	2	60	155	70
IX841	Non	200	1	20.0	2	60	155	70
IX842	Non	200	1	20.0	2	60	155	70
EX840	Non	230	1	17.2	2	60	155	70
EX841	Non	230	1	17.2	2	60	155	70
EX842	Non	230	1	17.2	2	60	155	70
JX840	Non	200	3	12.3	2	60	155	70
JX841	Non	200	3	12.3	2	60	155	70
JX842	Non	200	3	12.3	2	60	155	70
FX840	Non	230	3	10.8	2	60	155	70
FX841	Non	230	3	10.8	2	60	155	70
FX842	Non	230	3	10.8	2	60	155	70
GX840	Non	460	3	5.5	2	60	155	70
GX841	Non	460	3	5.5	2	60	155	70
GX842	Non	460	3	5.5	2	60	155	70
BAX840	Non	575	3	4.5	2	60	155	70
BAX841	Non	575	3	4.5	2	60	155	70
BAX842	Non	575	3	4.5	2	60	155	70

Model X840 is a reversible grinder pump, and models X841 and X842 are single-direction grinder pumps.

⚠ CAUTION All installation of controls, protection devices and wiring should be done by a qualified licensed electrician. All electrical and safety codes should be followed including the most recent National Electrical Code (NEC) and the Occupational Safety and Health Act (OSHA).

© Copyright 2015 Zoeller® Co. All rights reserved.
502-778-2731 | 800-928-7867 | 3649 Cane Run Road | Louisville, KY 40211-1961 | www.zoeller.com

GRINDER SYSTEMS

GRINDER MODELS 840/841/842 VERTICAL DISCHARGE - 20' (6 m) CORDS						
	P/N	WGT.	MODEL	VOLTS	PH	AMP
☐	840-0064	155 lb (70.3 kg)	EX840	230	1¤	17.2
☐	840-0065	155 lb (70.3 kg)	IX840	200	1¤	20.0
☐	840-0066	151 lb (68.5 kg)	JX840	200	3	12.3
☐	840-0067	151 lb (68.5 kg)	FX840	230	3	10.8
☐	840-0068	151 lb (68.5 kg)	GX840	460	3	5.5
☐	840-0069	151 lb (68.5 kg)	BAX840	575	3	4.5
☐	841-0017	155 lb (70.3 kg)	EX841	230	1¤	17.2
☐	841-0018	155 lb (70.3 kg)	IX841	200	1¤	20.0
☐	841-0019	151 lb (68.5 kg)	JX841	200	3	12.3
☐	841-0020	151 lb (68.5 kg)	FX841	230	3	10.8
☐	841-0021	151 lb (68.5 kg)	GX841	460	3	5.5
☐	841-0022	151 lb (68.5 kg)	BAX841	575	3	4.5
☐	842-0011	155 lb (70.3 kg)	EX842	230	1¤	17.2
☐	842-0012	155 lb (70.3 kg)	IX842	200	1¤	20.0
☐	842-0013	151 lb (68.5 kg)	JX842	200	3	12.3
☐	842-0014	151 lb (68.5 kg)	FX842	230	3	10.8
☐	842-0015	151 lb (68.5 kg)	GX842	460	3	5.5
☐	842-0016	151 lb (68.5 kg)	BAX842	575	3	4.5

¤ Single phase units require a set of capacitors and relay starting components.

STANDARD FEATURES:
- Reversible cutter action manual/auto**
- 1¼" NPT vertical discharge
- Carbon/ceramic tandem seals
- Thermal sensors** (overload on 1 Ph)
- Moisture probes**
- Vortex impeller:
  - Ductile iron (X840)
  - Bronze (X841 and X842)
- Stainless steel cutter and plate (R-C 55-60)
- Stainless steel shaft
- Stainless steel lifting bail
- Corrosion-resistant, powder coated epoxy paint
- 20' (6 m) power cord - 20' (6 m) Sensor cord
- Ul listed

OPTIONS:
- ☐ Extended Cord Lengths
- ☐ Bronze impeller (X840 only)
- ☐ Anti-Siphon Device

**Requires Circuit in Control Panel to Function
Reversible Feature Only Available on X840 Models

VARIABLE LEVEL FLOAT SWITCHES

3 Switches with weights and brackets

☐ P/N 10-3237 WGT. 10 lb (4.5 kg)

4 Switches with weights and brackets

☐ P/N 10-3238 WGT. 14 lb (6.4 kg)

Note: All variable level float switches in this section are mechanically activated and do not contain mercury.

CONTROL PANELS						
	SIMPLEX - NEMA 4 X			DUPLEX - NEMA 4X		
MODEL		P/N	WGT.		P/N	WGT.
EX or IX840	☐	10-2709	26 lb (11.8 kg)	☐	10-2713	34 lb (15.4 kg)
FX or JX840	☐	10-2710	25 lb (11.3 kg)	☐	10-2714	31 lb (14.1 kg)
GX840	☐	10-2711	25 lb (11.3 kg)	☐	10-2715	31 lb (14.1 kg)
BAX840	☐	10-2712	25 lb (11.3 kg)	☐	10-2716	31 lb (14.1 kg)
EX or IX841, 842	☐	10-2717	24 lb (10.9 kg)	☐	10-2721	30 lb (13.6 kg)
FX or JX841, 842	☐	10-1568	24 lb (10.9 kg)	☐	10-1596	27 lb (12.2 kg)
GX841, 842	☐	10-1560	24 lb (10.9 kg)	☐	10-1588	27 lb (12.2 kg)
BAX841, 842	☐	10-2720	24 lb (10.9 kg)	☐	10-2724	26 lb (11.8 kg)

CONTROL PANEL STANDARD FEATURES:
- NEMA 4X outdoor rating
- Intrinsically-safe relays
- Audible and visible high water alarm
- Starting, control, and alarm circuits
- Circuit breaker and rated motor contactor (1 Ph)
- Capacitors and motor starting relay (1 Ph)
- Motor-protective switch (circuit breaker/adj overloads) and rated motor contactor (3 Ph)
- Alternating circuit (duplex)
- Automatic reversing circuit (model X840 only)
- High water alarm light
- Internal seal leak light
- HOA switches and pilot light(s)
- Terminal strips
- Thermal cut-out circuit (3 Ph only)
- Padlock hasp
- UL listed
- Dry auxiliary contacts

OPTIONS:
- ☐ Flasher for High Water Alarm Light
- ☐ Manual Reset of High Water Alarm
- ☐ Elapsed Time Meters

For other options, please consult factory.

SIMPLEX REVERSING CONTROL BOXES*						
	AUTOMATIC			MANUAL		
MODEL		P/N	WGT.		P/N	WGT.
EX840	☐	10-0352	8 lb (3.6 kg)	☐	10-0360	7 lb (3.2 kg)
IX840	☐	10-0352	8 lb (3.6 kg)	☐	10-0360	7 lb (3.2 kg)
FX840	☐	10-0353	6 lb (2.7 kg)	☐	10-0361	5 lb (2.3 kg)
JX840	☐	10-0353	6 lb (2.7 kg)	☐	10-0361	5 lb (2.3 kg)
GX840	☐	10-0353	6 lb (2.7 kg)	☐	Not available	
BAX840	☐	Not available		☐	Not available	

*These control boxes consist of the reversing mechanisms and capacitors (1 Ph units) only. They will not control pumps. Refer to Section B for complete system controls. For duplex applications use two simplex reversing control boxes. (For pump prefix identification see News & Views 0052)

© Copyright 2015 Zoeller® Co. All rights reserved.

OUTDOOR BASIN, COVER, AND RAIL SYSTEM ASSEMBLIES STANDARD EQUIPMENT

- Fiberglass basin with anti-flotation ring
- (2) Steel electrical couplings
- 2" PVC discharge pipe from disconnect
- 2" Adaptaflex discharge pipe seal
- Non-sparking Z-Rail® Disconnect System
- 8' (2.4 m) stainless steel lifting cable for basin depths to 84" (213 cm) [2′ (3.7 m) stainless steel lifting cable for basin depths of 96" (244 cm)]
- 2" PVC ball valve(s)
- 2" cast iron check valve(s)
- 1-4" rubber inlet pipe seal (field-installed)
- Fiberglass cover

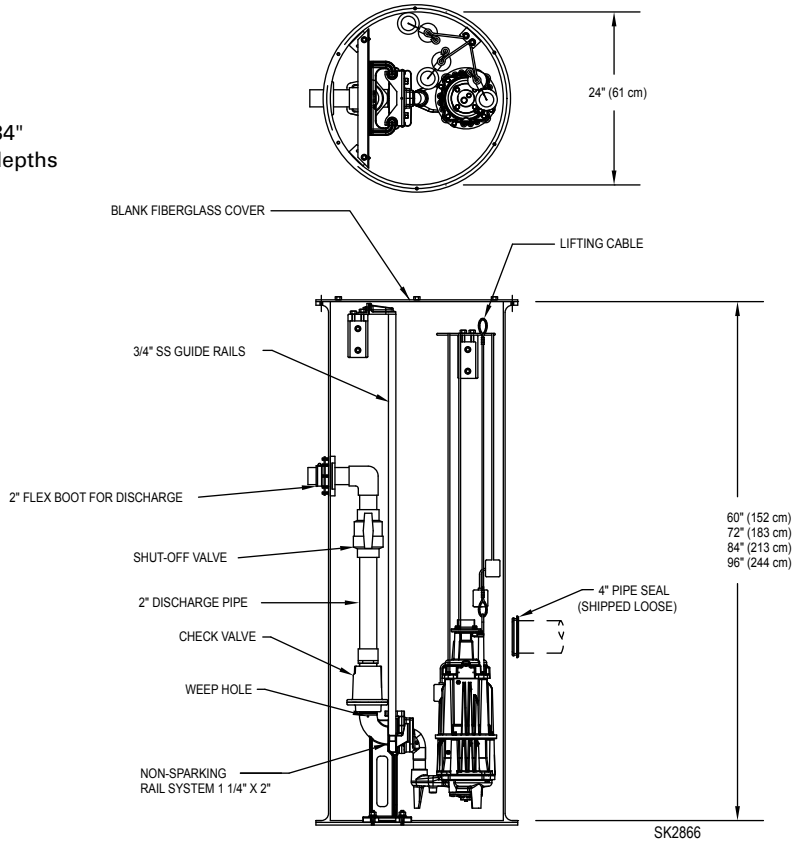

SIMPLEX

☐	24" x 60" (61 x 152 cm)	P/N 33-0998 WGT. 219 lb (99.3 kg)
☐	24" x 72" (61 x 183 cm)	P/N 33-0999 WGT. 233 lb (105.7 kg)
☐	24" x 84" (61 x 213 cm)	P/N 33-1000 WGT. 264 lb (119.7 kg)
☐	24" x 96" (61 x 244 cm)	P/N 33-1001 WGT. 277 lb (125.6 kg)

DUPLEX

☐	36" x 60" (91 x 152 cm)	P/N 33-1002 WGT. 389 lb (176.4 kg)
☐	36" x 72" (91 x 183 cm)	P/N 33-1003 WGT. 472 lb (214.1 kg)
☐	36" x 84" (91 x 213 cm)	P/N 33-1004 WGT. 499 lb (226.3 kg)
☐	36" x 96" (91 x 244 cm)	P/N 33-1005 WGT. 525 lb (238.1 kg)

•All stainless steel fitted
•Larger diameter or deeper basins
(Allow for overhead clearance)

PUMP NOT INCLUDED

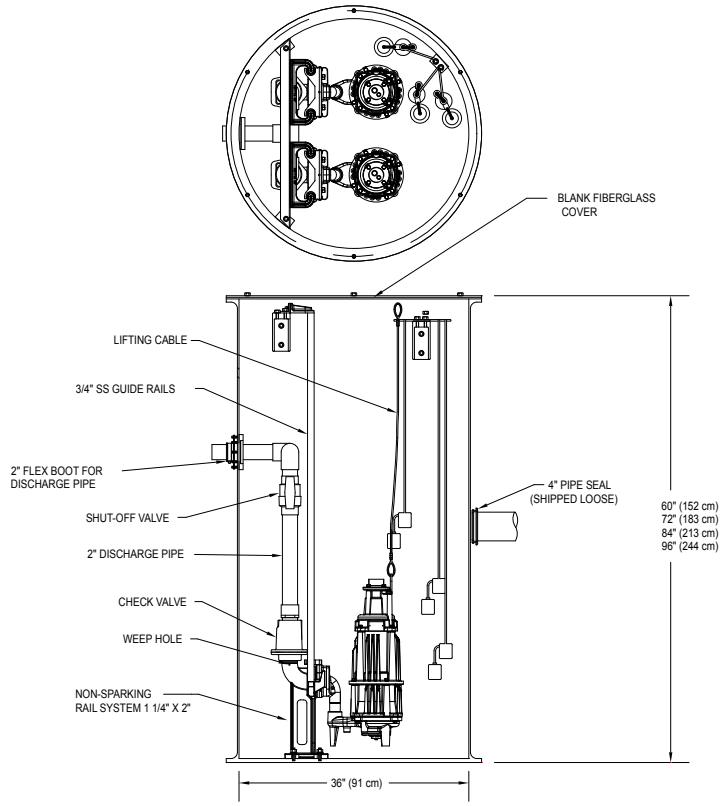

— PREPACKAGED CHECKLIST —

SIMPLEX

(1) Grinder	P/N _____
(1) Simplex Control Panel	P/N _____
(1) Variable Level Float Assembly	P/N _____
(1) Prepackaged Basin Assembly (24" [61 cm] Diameter)	P/N _____

DUPLEX

(2) Grinder	P/N _____
(1) Duplex Control Panel	P/N _____
(1) Variable Level Float Assembly	P/N _____
(1) Prepackaged Basin Assembly Duplex (36" [91 cm] Diameter)	P/N _____

© Copyright 2015 Zoeller® Co. All rights reserved.
502-778-2731 | 800-928-7867 | 3649 Cane Run Road | Louisville, KY 40211-1961 | www.zoeller.com